SHIPPING MARKS			
2A	3A	4A	5A
2B	3B	4B	
2C	3C		
2D			
2F			
2K			
2N			
2S			
2T			
2U			
2X			

ASSEMBLY MARKS				
aa	ba	ca	da	fa
ab	bb	cb	db	
ac	bc	cc		
ad	bd			
af				
ak				
an				
as				
at				
au				
ax				

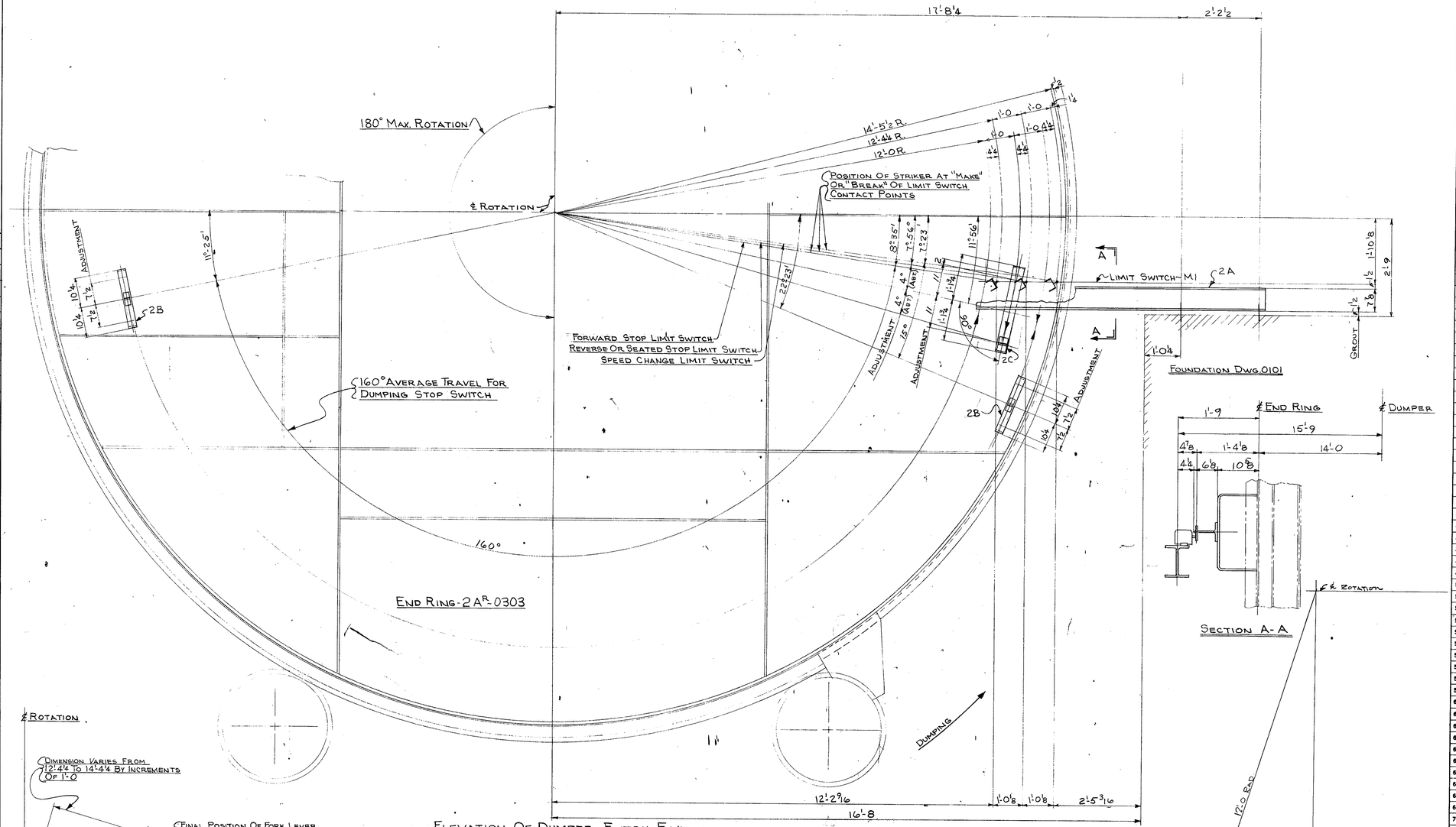

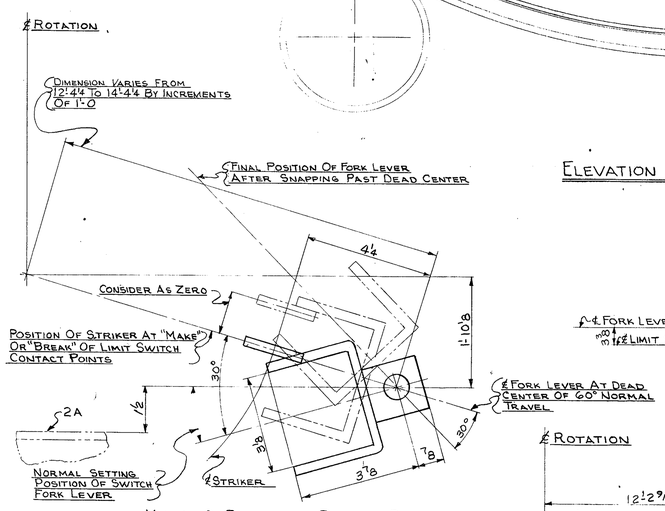

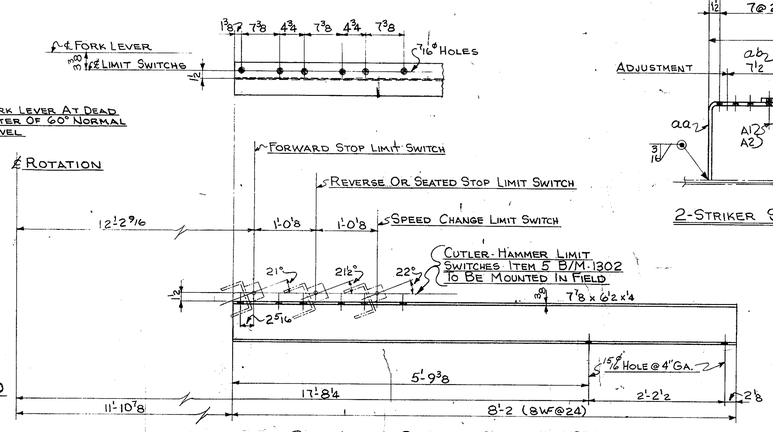

One - Limit Switch Support - 2A

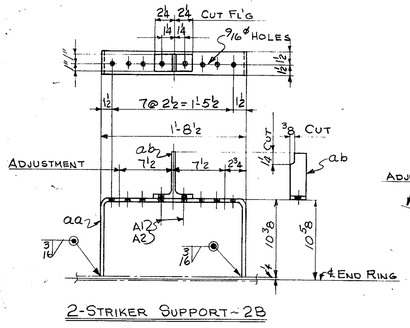

2-Striker Support ~ 2B

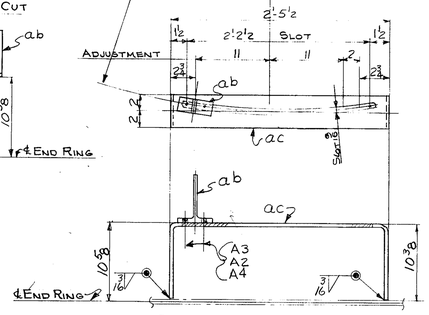

One - Striker Support ~ 2C

CAUTION:

Limit Switch Mounting Procedure

1. Locate Switch To Radial Dimensions Shown Above.
2. Clamp Switch Fork On Serrated Shaft So Its Two Positions Are 30° Displaced From Radial Line.
3. Check To See That Striker Outer Edge Clears Retracted Switch Horns By ¾" Minimum. (Check 2 Positions)
4. Make Certain Striker Axial Position Allows For At Least ¾" Axial Drift Either Way Of Dumper End Ring. (Weld Rings On Fork If Neccessary.)

Notes:

Holes As Noted
No Shop Paint Within 2" Of Field Welds

BILL OF MATERIAL

LINE	MARK	NO. PCS.	SECTION	LENGTH	WEIGHT	REMARKS	ITEM NO.	PURCH.	ACCT'G
3	2A	1	8WF@24	8 2	196	Limit Switch Support	5		
6			2-Striker Supports ~ 2B						
7	aa	2	Bars 3 x ¼	3 4¼	12	Bent	5		
8	ab	2	ST 6WF@18	0 2	4		5		
9	A1	4	½ϕ A.S.R. Bolts	0 1½					
10	A2	4	½ϕ Spr. Lockwasher						
11			16						
13			One-Striker Support ~ 2C						
14	ac	1	Bar 4 x ¼	4 1¼	14	Bent	5		
15	ab	1			3		5		
16	A3	2	½ϕ A.S.R. Bolts	0 2					
17	A4	2	½ϕ Std. Flat Washers						
18	A2	2							
19			17						
23	M1	Ref	3-Cutler-Hammer						
24			Limit Switch						
25			Item 5 B/M 1302						
81						Paint B/M Div. 87			
100			Total Weight		229				

REV. #	DATE	NAME	DESCRIPTION

THIS DRAWING IS THE PROPERTY OF HEYL & PATTERSON, INC., AND FURNISHED IN CONFIDENCE FOR TEMPORARY USE AND TO BE RETURNED THEREAFTER IF REQUESTED. NOT TO BE COPIED OR DISCLOSED TO OTHERS WITHOUT THE EXPRESS CONSENT OF HEYL & PATTERSON, INC.

5986-3-0321

HEYL & PATTERSON, INC.
CONTRACTING ENGINEERS
PITTSBURGH, U. S. A.

Rotary Railroad Car Dumper
Genl. Arrg't. Of Limit Switches & Det. Of Limit Switch Strikers
For Board Of Water And Light
First Unit - Delta Station
Lansing, Michigan

Division 03 — Scale 3/4" = 1'-0
Made Ken Voest — Date 2-10-70
Checked T. Weidner — " 2-13-70
Approved W.J. — " 2-17-70

ASSEMBLY MARKS				
aq	ba	ca	da	fa
ab	bb	cb	db	
ac	bc	c		
ad	bd			
af				
ak				
an				
as				
at				
au				
ax				

SHIPPING MARKS				
2A	3A	4A	5A	
2B	3B	4B		
2C	3C			
2D				
2F				
2K				
2N				
2S				
2T				
2U				
2X				

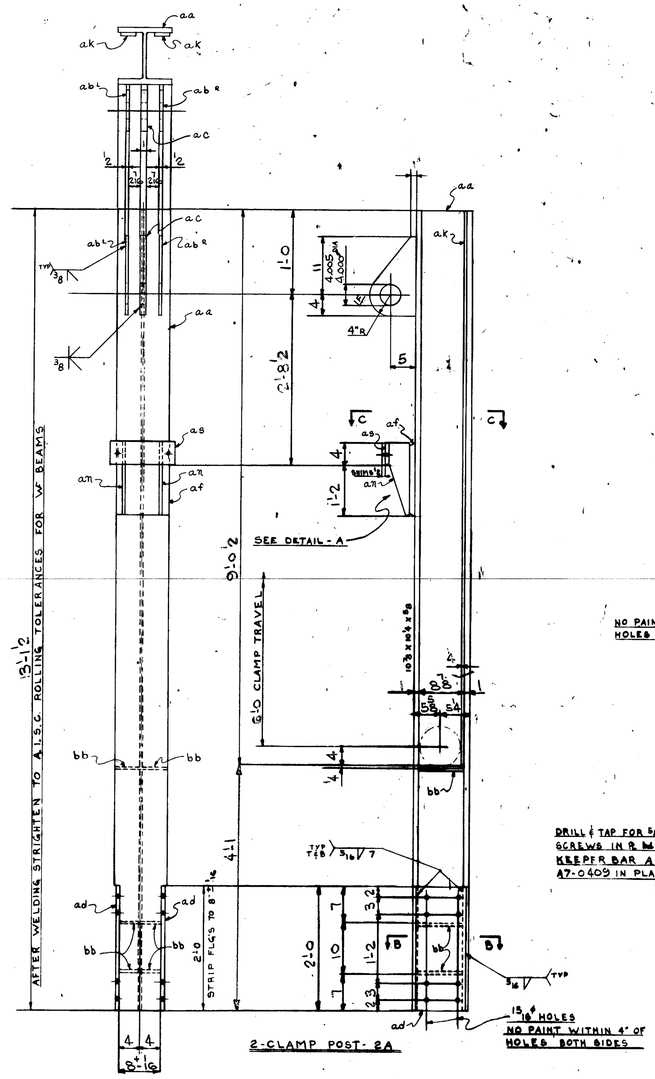

2-CLAMP POST-2A

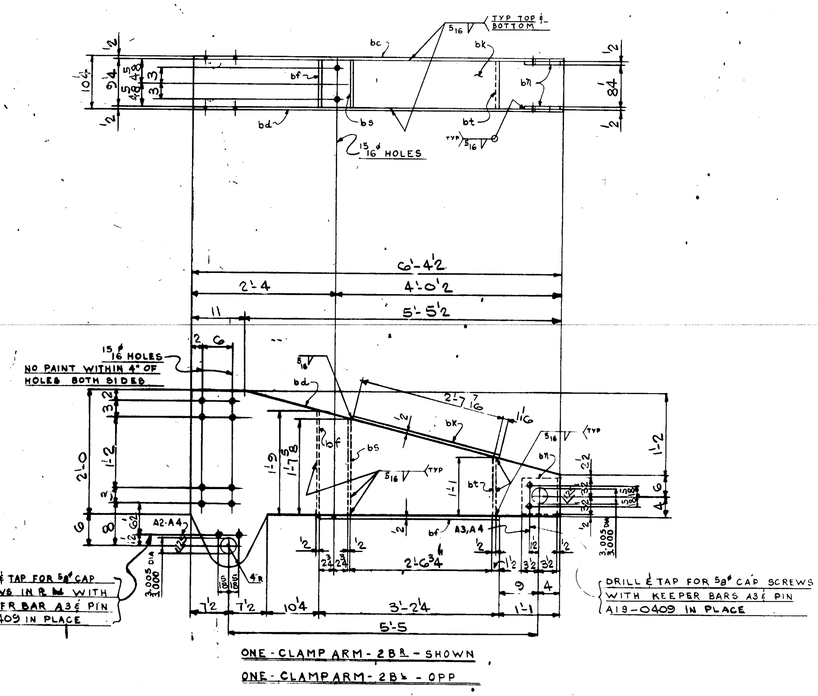

ONE-CLAMP ARM-2BS-SHOWN

ONE-CLAMP ARM-2BS-OPP

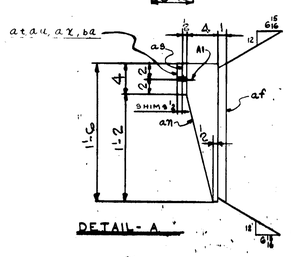

DETAIL - A

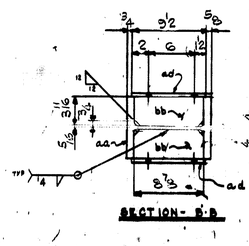

SECTION - B-B

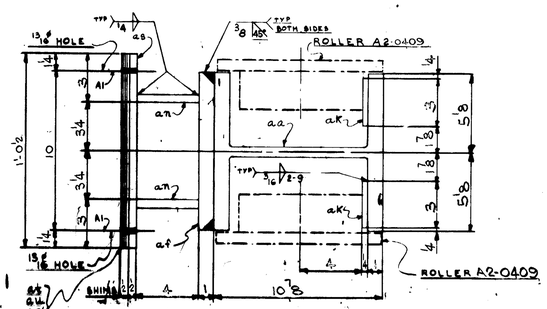

SECTION - C-C

BILL OF MATERIAL

LINE	MARK	NO. PCS	DESCRIPTION	LENGTH	WEIGHT	REQ'D. IN SHOP			ITEM NO.
1									
2			2-CLAMP POST-2A						
3	aa	2	WF 10 @ 89	13 1/2	2317				11
4	ab⅝	4	PL 9 X 1/2	1 3	78				29-5
5	ac	2	PL 9 X 1	1 3	78				3
6	ad	4	PL 9 1/2 X 5/8	2 0	165				3
7	af	2	PL 10 1/4 X 1	1 6	106				5
8	ak	4	BARS 3 X 1/4	9 0 1/2	90		C-1045		5
9	an	4	BARS 4 X 1/2	6	41				5
10	as	2	BARS 4 X 1/2	1 0 1/2	14				5
11	at	2	BARS 4 X 1/2	1 0 1/2	14		SHIMS		5
12	au	2	BARS 4 X 1/4	1 0 1/2	7		SHIMS		5
13	ax	2	BARS 4 X 1/8	1 0 1/2	4		SHIMS		5
14	ba	2	BARS 4 X 1/16	1 0 1/2	4		SHIMS		5
15	bb	12	BARS 3 5/8 X 1/2	0 8 3/8	57				6
16	A1	4	3/4ø A.S.R. BOLTS	0 2 1/2					
17			2975						
18									
19									
20									
21			ONE-CLAMP ARM-2BS-SHOWN						
22			ONE-CLAMP ARM-2BS-OPP						
23	bc	2	PL 3/4 X 1/2	6 4 1/2	554				29-5
24	bd	2	PL 3/4 X 1/2	6 4 1/2	554				29-5
25	bf	2	PL 9 1/4 X 1/2	4 11 1/4	150		BENT		29-5
26	bk	2	PL 9 1/4 X 1/2	2 8 1/2	82				29-5
27	bn	4	PL 7 X 1/2	0 7	28				29-5
28	bs	2	PL 9 1/4 X 1/2	1 7 5/8	49				29-5
29	bt	2	PL 9 1/4 X 1/2	1 1	30				29-5
30	A2	4	5/8ø HEX HD. CAP SCREWS	0 1					
31	A3	8	5/8ø HEX HD. CAP SCREWS	0 1 1/4					
32	A4	12	5/8ø SPRING LOCK WASHERS						
33			1441						
34									
35									
36									
37									
38									
39									
40									
41									
42									
43									
44									
45									
46									
47									
48									
49									
50									
51									
52									
53									
54									
55									
56									
57									
58									
59									
60									
61									
62									
63									
64									
65									
66									
67									
68									
69									
70			PAINT B/M DIV 8701						
71									
72									
73									
74									
75					T/WT 4422				

4848 158-65

AB 10-29-71

REV. #	DATE	NAME	DESCRIPTION

THIS DRAWING IS THE PROPERTY OF HEYL & PATTERSON, INC. AND FURNISHED IN CONFIDENCE FOR TEMPORARY USE AND TO BE RETURNED THEREAFTER IF REQUESTED. NOT TO BE COPIED OR DISCLOSED TO OTHERS WITHOUT THE EXPRESS CONSENT OF HEYL & PATTERSON, INC.

5986-3-0402

HEYL & PATTERSON, INC.
CONTRACTING ENGINEERS
PITTSBURGH, U. S. A.

ROTARY RAILROAD CAR DUMPER
DETAIL OF CLAMP POST & ARM

FOR BOARD OF WATER & LIGHT
FIRST UNIT - DELTA STATION
LANSING, MICHIGAN

DIVISION 04 SCALE 3/4"
MADE G. DOLFI DATE 2-21-70
CHECKED J. WEDNIG 2-23-70
APPROV. 2-23-70

A. M. SMITH CO., PGH., PA.

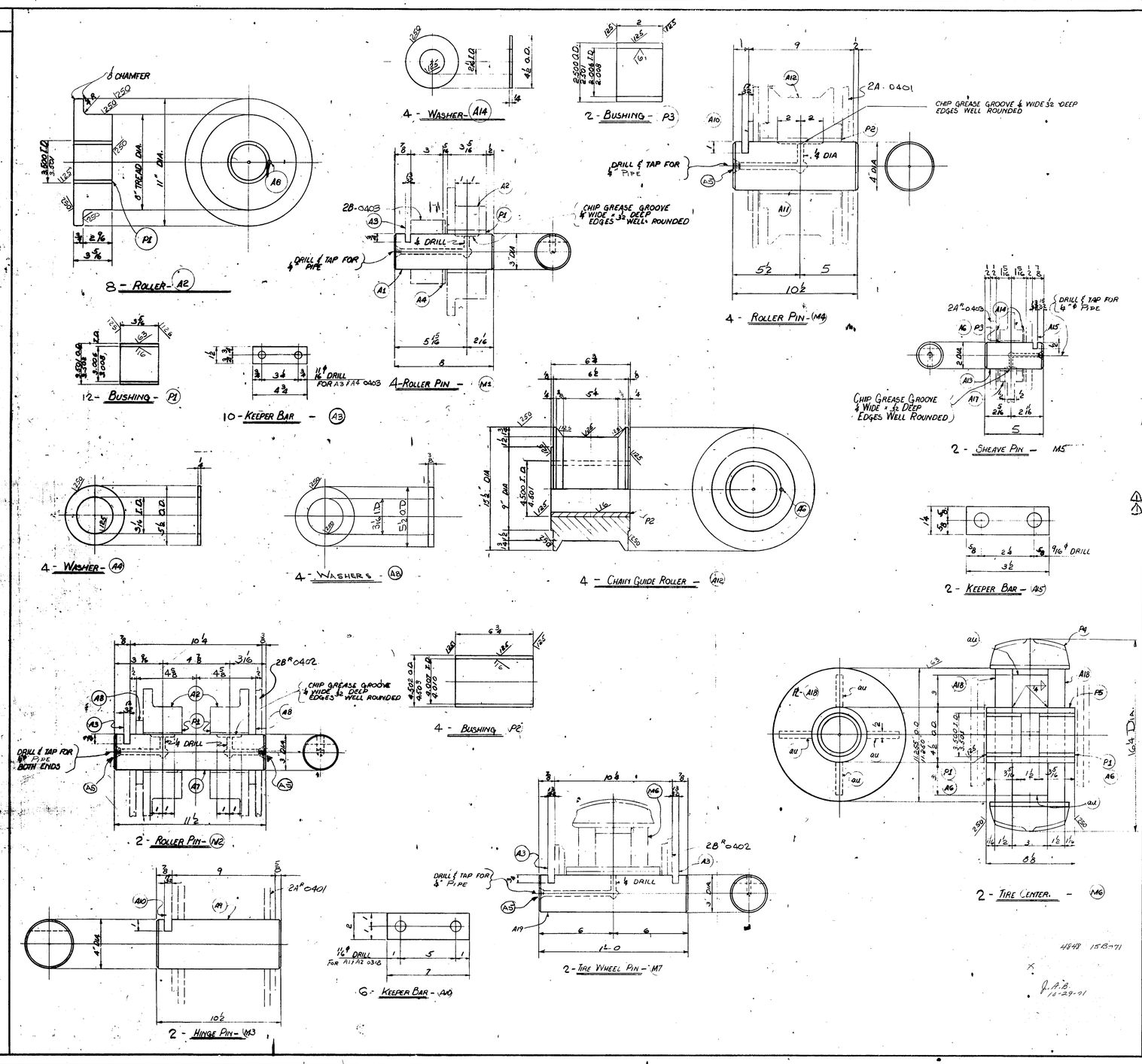

BILL OF MATERIAL

LINE	MARK	NO. REQ.	DESCRIPTION	WEIGHT	REQ'D. IN SHOP			
1			4 - ROLLER PINS - M1					
2			ASSEMBLE IN SHOP WITH ROLLER BRACKETS - 2B-0403					
3	A1	4	PINS 3" DIA × 0'-8	64		C-1045 T&P		
4	A2	4	ROLLERS 11" O.D. × 3.501 I.D. × 3 5/16	270		C-1045 STL.		
5			8" DIA × 2 9/16 TREAD CUT FROM					
6			B5 11 1/2 × 3 1/2 × 0'-11 1/2 R&H WT. 600#					S
7	P1	4	BUSHINGS 3.501/3.502 O.D. × 3.006/3.008 I.D. × 0'-3 5/16	8		S.A.E. 67 BRZ.		
8	A3	4	KEEPERS BARS 1 1/2 × 3/4 × 0'-4 3/4	2		STL.		S
9	A4	4	WASHERS 5 1/2 O.D. × 3 1/16 I.D. × 1/4" THK.	6		STL.		
10			MAKE FROM 4 BARS - 5 3/4 × 6 × 0'-5 3/8					S
11	A6	4	5/16 × 1/2 HEADLESS SET SCREWS			BRASS		
12								
13			2 - ROLLER PINS - M2					
14			ASSEMBLE IN SHOP WITH CLAMP ARMS - 2B 2/2 - 0402					
15	A7	2	PINS 3" DIA × 0'-11 1/2 LG.	48		C-1045 T&P		
16	A2	4	ROLLERS ROUGH WT. 600#	270		C-1045 STL.		S
17	P1	4	BUSHINGS	8				
18	A3	2	KEEPER BARS	1				S
19	A8	4	WASHERS 5 1/2 O.D. × 3 1/16 I.D. × 3/8 THK.	12		STL.		S
20	A5	4	1/4 BUTTON HD GREASE FITTING					
21	A6	4	5/16 × 1/2 HEADLESS SET SCREWS			BRASS		
22								
23			2 - HINGE PINS - M3					
24			ASSEMBLE IN SHOP WITH CLAMP BEAMS - 2A - 0401					
25	A9	2	PINS - 4" DIA × 0'-10 1/2 LG.	70		C-1045 T&P		
26	A10	2	KEEPER BAR 2 1/2 × 0'-7	4		STL.		S
27								
28			4 - ROLLER PINS - M4					
29			ASSEMBLE IN SHOP WITH CLAMP BEAMS 2A - 0401					
30	A11	4	PINS - 4" DIA × 0'-10 1/2 LG.	140		C-1045 T&P		
31	A12	4	CHAIN GUIDE ROLLERS - 15 1/2 O.D. 4.500/4.501 I.D.	880		C-1020 H.R.S.		
32			1/2 × 3/4 MAKE FROM 16 1/2 SQ. × 7" THK (2) 180#					S
33	P2	4	BUSHINGS 4.502/4.503 O.D. × 4.010/4.0 I.D. × 0'-6 3/4	30		S.A.E. 67 BRZ.		
34								
35	A10	4	KEEPER BARS	4				S
36	A6	4	5/16 × 1/2 HEADLESS SET SCREWS			BRASS		
37	A5	4	1/4 BUTTON HD GREASE FITTING					
38			2 - SHEAVE PINS - M5					
39			ASSEMBLE IN SHOP WITH SHEAVE BRACKETS 2A 2/2 - 0403					
40	A13	2	PINS 2 DIA × 0'-6 LG.	8		C-1045 O.F.		
41	P3	2	BUSHINGS 2.499/2.500 O.D. × 2.006/2.008 I.D. × 0'-2 1/2	2		S.A.E. 67 BRZ.		
42	A14	4	WASHERS 4 1/2 O.D. × 2 1/16 I.D. × 1/4 THK.	3		STL.		S
43	A15	2	KEEPER BARS 1 1/4 × 3/4 × 0'-3 1/2	1		STL.		S
44								
45	A17	REF.	2 - SHEAVES - 15 DIA 5/16" ROD OF SCORE					
46			GROOVE 7" HUB 4 1/2 DIA × 1" L × 1" BORE					
47			2.499/2.500 PAT. AB26 - 0A16 C.I.					
48	A5	2	5/16 × 1/2 HEADLESS SET SCREW			BRASS		
49								
50			2 - TIRE CENTERS - M6					
51			ASSEMBLE IN SHOP WITH TIRE WHEEL PIN - M7					
52	P3	2	INDUSTRIAL TIRE 16 1/4 × 7 11/16 PRESSED	90				
53			OR TYPE SOLID TYPE NON DIRECTIONAL					
54			TREAD REQ'D BORE 11.250/11.235 US ROYAL					
55			INNACUSH (OR EQUAL)					
56	P5	2	PIPE 4" DOUBLE EXTRA STRONG	39		STL.		
57	P1	4	BUSHING	8				
58	A18	4	PIPE 11.250/11.235 O.D. × 4 1/2 I.D. × 1 1/2 THK MAKE	150		STL.		
59			FROM PL 11 1/2 × 1 1/2 × 0'-11 1/2 FLAME CUT 45°					S
60	au	8	BARS 3 1/2 × 0'-3	10		STL.		S
61	A6	4	5/16 × 1/2 HEADLESS SET SCREWS			BRASS		
62								
63								
64								
65			2 - TIRE WHEEL PIN - M7					
66			ASSEMBLE IN SHOP WITH TIRE CENTERS M6 & CLAMP					
67			ARM - 2B 2/2 - 0402					
68	A1	2	PIN 3 DIA × 1'-0	48		C-1045 T&P		
69	A3	4	KEEPER BARS	2				S
70	A5	2	1/4 BUTTON HD GREASE FITTING					
71								
72								
73								
74								
75			TOTAL WT.	2178#				

REV. #	DATE	NAME	DESCRIPTION
1	11-25-70	J.P.F.	CHANGED LINES 40 & 41 (WD 0-R1 & 1-R2)

5986-3-0409

HEYL & PATTERSON, INC.
CONTRACTING ENGINEERS
PITTSBURGH, U.S.A.

ROTARY RAILROAD CAR DUMPER
CLAMP MECHANICAL DETAILS

FOR: BOARD OF WATER AND LIGHT
FIRST UNIT - DELTA STATION
LANSING, MICHIGAN

DIVISION: 04
MADE: G. DOLFI — DATE 2-6-70
CHECKED: J.P. FUNTAL — " 2-6-70
APPROVED: WJF — " 2-6-70

THIS DRAWING IS THE PROPERTY OF HEYL & PATTERSON, INC. AND FURNISHED IN CONFIDENCE FOR TEMPORARY USE AND TO BE RETURNED THEREAFTER IF REQUESTED. NOT TO BE COPIED OR DISCLOSED TO OTHERS WITHOUT THE EXPRESS CONSENT OF HEYL & PATTERSON, INC.

A.B. SMITH CO., POH., PA.

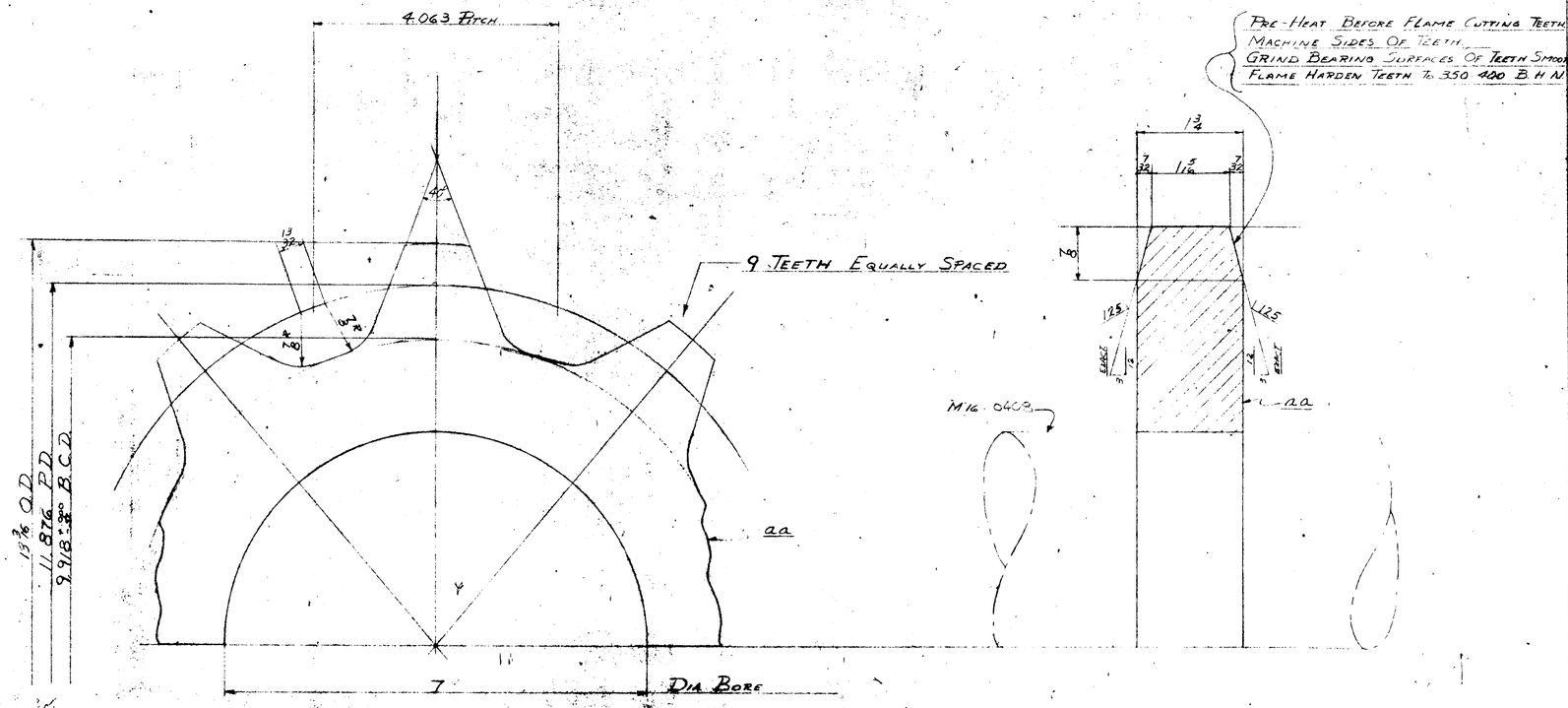

2-Brake~Sprockets~M-1

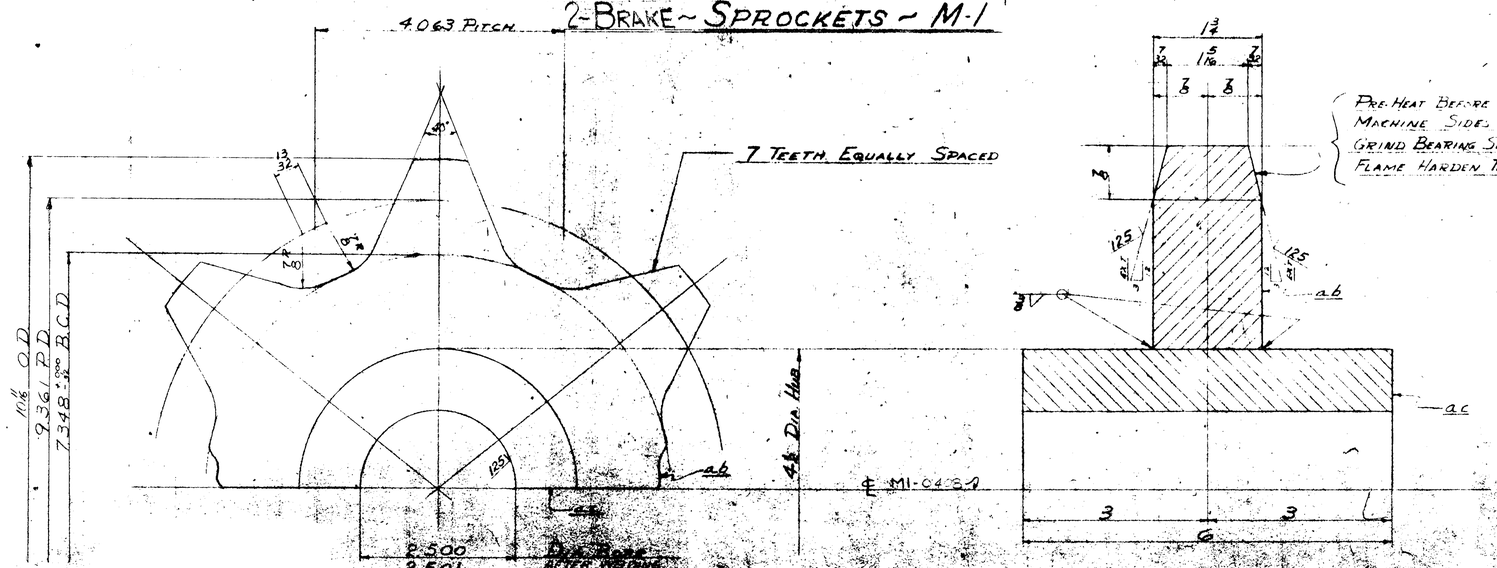

2~Shuttle~Sprockets~M2

BILL OF MATERIAL

LINE	MARK	LIST	DESCRIPTION	WT.	ITEM
1			2-Brake Sprockets-M-1 Assemble in Shop with Range Wheel and Mounting		
2	aa	2	Sprockets 13 3/16 O.D. - 11.876 P.D.	147	
3			9T-1 3/4 F-T P.D.		
4			Flame Harden Teeth 350-400 BHN		
5			Cut From 2 Pl. 13 3/16 x 13 3/16 x 1 1/2		5
6			(C1045 Stl.)		
7					
8					
9			Assemble in Shop with		
10			2-Shuttle Sprockets-M-2 Shuttle Pin M16-0408		
11	ab	2	Sprockets 10 1/16 O.D. - 9.361 P.D.	140	
12			7T-1 3/4 F-45° P.D.		
13			Flame Harden Teeth 350-400 BHN		
14			Cut From 2 Pl. 11 1/2 x 11 1/2 x 0.114		5
15			(C1045 Stl.)		
16	ac	2	Bar 4 1/2" O.D. - 2.500 I.D. (after	37	5
17			welding ab & ac.) x 6" Lg.		
18			C 1045 Turned & Polished		
19			Stl.		
20			174		
21					
22					
23					
24					
25					
26					
27					
28					
29					
30					
31					
32					
33					
34					
35					
36					
37					
38					
39					
40					
41					
42					
43					
44					
45					
46					
47					
48					
49					
50				374	

REV. #	DATE	MARK	DESCRIPTION

SCALE Full Size INCHES TO ONE FOOT

598G-3-0411

HETL & PATTERSON, INC.
CONTRACTING ENGINEERS
PITTSBURGH, U.S.A.

ROTARY RAILROAD CAR DUMPER
DETAILS OF SHUTTLE
BRAKE SPROCKETS

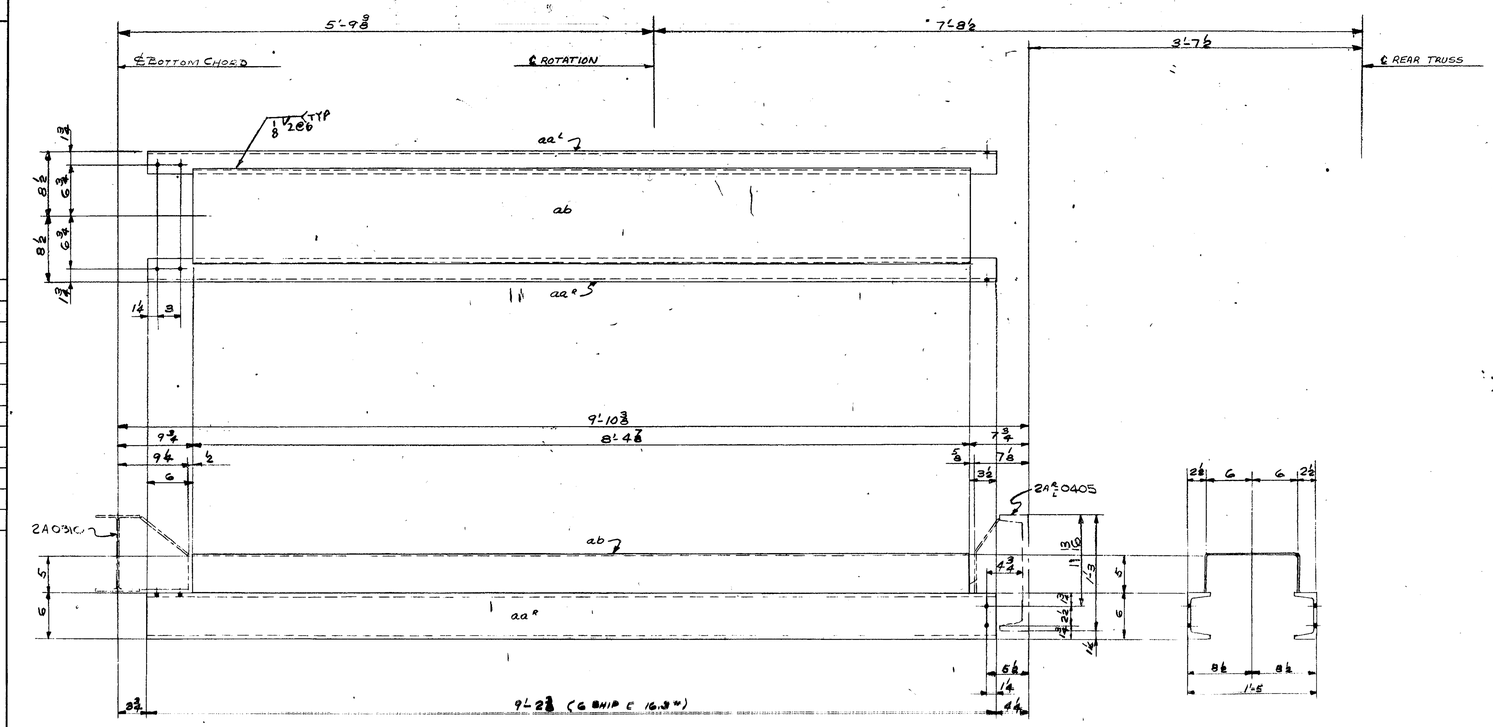

SHUTTLE GUIDE - 2C

NOTE
ALL HOLES 13/16 ϕ UNLESS NOTED

ASSEMBLY MARKS				
aa	ba	ca	da	fa
ab	bb	cb	db	
ac	bc	cc		
ad	bd			
af				
ak				
an				
as				
at				
au				
ax				

SHIPPING MARKS			
2A	3A	4A	5A
2B	3B	4B	
2C	3C		
2D			
2F			
2K			
2N			
2S			
2T			
2U			
2X			

BILL OF MATERIAL

LINE	MARK	NO. PCS.	SECTION	LENGTH		WEIGHT	REMARKS	ITEM NO.	PURCHASING	ACCT'G.
1			2 - SHUTTLE GUIDES - 2C							
2	aa'	4	6 SHIP C x 16.3#	9	2 3/8	600		17		
3	ab	2	PL. 22 x #10	8	4 7/8	175	(BENT)	5		
63			SHOP PAINT SEE REMARKS							
64							4248 - 10-8-74			
69							10-29-71			
75						775				

REV. #	DATE	NAME	DESCRIPTION

THIS DRAWING IS THE PROPERTY OF HEYL & PATTERSON, INC., AND FURNISHED IN CONFIDENCE FOR TEMPORARY USE AND TO BE RETURNED THEREAFTER IF REQUESTED. NOT TO BE COPIED OR DISCLOSED TO OTHERS WITHOUT THE EXPRESS CONSENT OF HEYL & PATTERSON, INC.

5986-3-0412

HEYL & PATTERSON, INC.
CONTRACTING ENGINEERS
PITTSBURGH, U.S.A.

ROTARY RAILROAD CAR DUMPER
DETAILS OF SHUTTLE GUIDE

FOR B. & O. OF W.VA. AND LIGHT
FLEET WHEELING STATION
WHEELING

DIVISION C-4 SCALE —
MADE G. WOLFEL DATE 2-13-70
CHECKED T. WEISNER " 2-16-70
APPROVED W.J. " 4-7-70

10 8133 CRYSTALINE, A.B. SMITH CO., PGH., PA., PRES-PAT

BILL OF MATERIAL

LINE	MARK	NO. PCS.	DESCRIPTION REQ. IN SHOP	PURCHASING	ACCTG.
1					
2			ITEM 4 - PUSHBUTTON STATION (BY CUSTOMER) NO		
3			1-DUMPER PUSHBUTTON STATION WITH BUTTONS		
4	8		MARKED "FORWARD", "STOP", "REVERSE"		
5			WITH SELECTOR SWITCH MARKED		
6			JOG -AUTOMATIC". ALSO REQUIRED ARE THE		
7			FOLLOWING PILOT LIGHTS: "DUMPER SEATED"; "CAR SPOTTED"		
8			"MOTOR OVERHEATING"; ALSO PROVIDE SELECTOR		
9			SWITCH MARKED "UNIT TRAIN-RANDOM CAR"		
10					
11					
12					
13			ITEM 5 - DUMPER LIMIT SWITCHES NO		
14		3	CUTLER-HAMMER BULLETIN 14977H39, WITH H42		
15			FORKED LEVER, LIMIT SWITCHES IN CLASS II,		
16			DIVISION 1, NEMA 9 ENCLOSURES, FOR USE AS		
17			FOLLOWS:		
18			1 - ITEM 5A - FORWARD STOP L. S.-1		
19			1 - ITEM 5B - SPEED CHANGE L. S.-3 (BOTH DIRECTIONS)		
20			1 - ITEM 5C - REVERSE STOP L. S.-2		
21		1	- ITEM 5D - CUTLER-HAMMER BULLETIN 14977- NO		
22			LIMIT SWITCH WITH H40 ROLLER		
23			LEVER: WITH 1 NO AND 1 NC		
24			CONTACT WITHOUT OVERLAP AND		
25			WITH SPRING RETURN.		
26			SWITCH IN CLASS II, DIV. 1,		
27			NEMA 9 ENCLOSURE FOR "PLATEN SEATED"		
28			OR "DUMPER READY" INDICATION.		
29			L.S.-5		
30					
31					
32			ITEM 6 - CAR POSITION SENSING EQUIPMENT		
33		2	SETS OF ULTRASONIC CAR SENSORS (ITEM 6A)		
34			FOR POSITIONING OF SHORT CARS (31'-0) ON		
35			DUMPER (BROKEN BEAM TO ENERGIZE RELAY & CLOSE CONTACT)		
36			EACH SET TO INCLUDE:		
37			A. #03L SENSORS WITH FOCALIZERS (TRANSMITTER		
38			AND RECEIVER -- ONE WITH 20' OF CABLE,		
39			ONE WITH 80')		
40			B. #32RD STANDARD AMPLIFIER WITH DPDT RELAY		
41			C. #32 HEATED CASE FOR OUTDOOR SERVICE COMPLETE		
42			WITH #49-15305 NEMA 9 ENCL. COMPLETE MODEL		
43			#4-32-32RD-03L. MOUNT ON DUMPER TO SPOT CAR.		
44			ABOVE SENSORS (ITEM 6A) COMPLETE WITH STANDARD MOUNTING		
45			FITTING #49-12788		
46		2	SETS OF ULTRASONIC CAR SENSORS (ITEM 6B) FOR		
47			POSITIONING OF UNIT TRAIN CARS ON DUMPER		
48			(BROKEN BEAM TO ENERGIZE RELAY & CLOSE CONTACT)		
49			EACH SET TO INCLUDE:		
50			A. #03L SENSORS WITH #49-25752 SENSOR MOUNTING		
51			FITTINGS FOR PIPING TO SPOT CAR WHEEL WITH		
52			6" RANGE SPACING.		
53			B. #32RD STANDARD AMPLIFIER WITH DPDT RELAY		
54			C. #32 HEATED CASE FOR OUTDOOR SERVICE.		
55			COMPLETE WITH #49-15305 NEMA 9 ENCLOSURE		
56			COMPLETE MODEL #4-32-32RD. MOUNT ON DUMPER		
57			TO SPOT CAR WHEELS.		
58					
59				4848	158-9
60			ITEM 6C - PHOTO-ELECTRIC EYE RELAYS X		
61		2	GENERAL ELECTRIC COMPANY TYPE M-500 OUTDOOR		
62			TRANSISTORIZED PHOTO-ELECTRIC SYSTEM AS		
63			FOLLOWS: R.L.J. 4-22-71		
64			2 - CAT. 3S7505KH501A1 PLUG IN RELAY		
65			2 - CAT. 3S7505ML500A1 LIGHT SOURCE		
66			2 - CAT. 3S7505MR500A1 RECEIVER		
67			MOUNT 1 SET AT EACH END OF DUMPER AT COUPLER		
68			HEIGHT ON FOUNDATION (IMMEDIATELY ADJACENT TO		
69			DUMPER)		
70					
71			P. D. - OBTAIN THREE APPROVAL PRINTS OF ALL		
72			PURCHASED ITEMS 1, 2, 5 AND 6 AND		
73			ONE REPRODUCIBLE AFTER FINAL APPROVAL.		
74			O/D AND W/D WHERE APPLICABLE.		
75					

REV. #	DATE	NAME	DESCRIPTION
4	1-15-71	S.K.K	WAS #49-22949 (LINE 45)
3	9/23/70	F.J.C	REVISE LINES 35, 40, 43, 48, 53, 56 (CHANGE D TO RD)
2	4/20/70	F.J.C	CHANGE ITEM 6 & REF. TO EXPL. PROOF
1	4/14/70	F.J.C.	ADD LINES 44 & 45
1	4/14/70	F.J.C.	CHANGE LINES 4-7, 18-20, 29

THIS DRAWING IS THE PROPERTY OF HEYL & PATTERSON, INC., AND FURNISHED IN CONFIDENCE FOR TEMPORARY USE AND TO BE RETURNED THEREAFTER IF REQUESTED. NOT TO BE COPIED OR DISCLOSED TO OTHERS WITHOUT THE EXPRESS CONSENT OF HEYL & PATTERSON, INC.

5986-3-1302

HEYL & PATTERSON, INC.
CONTRACTING ENGINEERS
PITTSBURGH, U. S. A.

ROTARY RAILROAD CARDUMPER
B/M ELECTRICAL EQUIPMENT

FOR BOARD OF WATER & LIGHT
FIRST UNIT - DELTA STATION
LANSING, MICHIGAN

DIVISION 13 SCALE
MADE F.J.C DATE 1-16-70
CHECKED " "
APPROVED W.J. " 1-22-70

9333 ZENITH, A.B. SMITH CO., PGH., PA.

SHIPPING MARKS			
2A	3A	4A	5A
2B	3B	4B	
2C	3C		
2D			
2F			
2K			
2N			
2S			
2T			
2U			
2X			

ASSEMBLY MARKS				
aa	ba	ca	da	fa
ab	bb	cb	db	
ac	bc	cc		
ad	bd			
af				
ak				
an				
as				
at				
au				
ax				

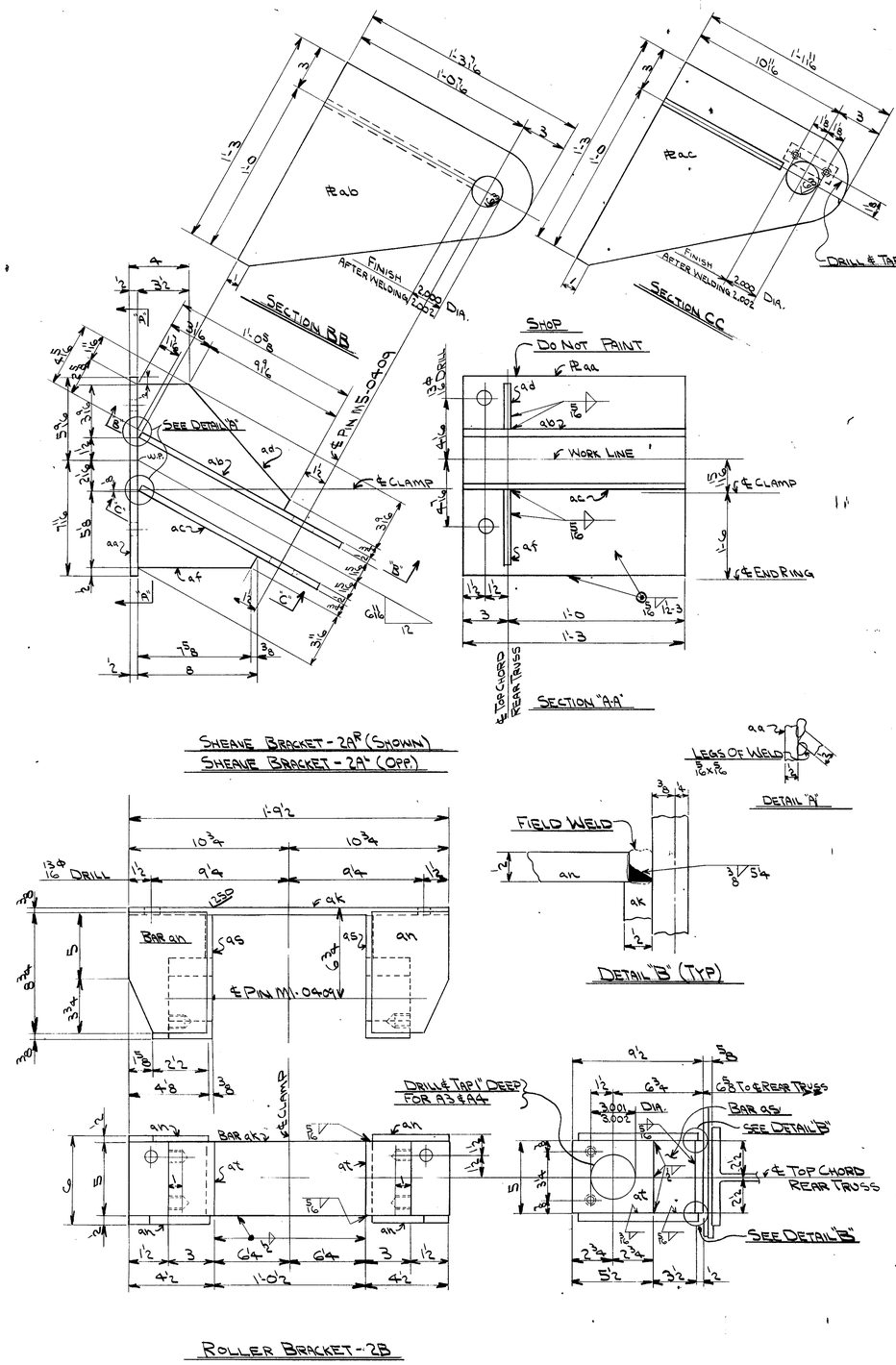

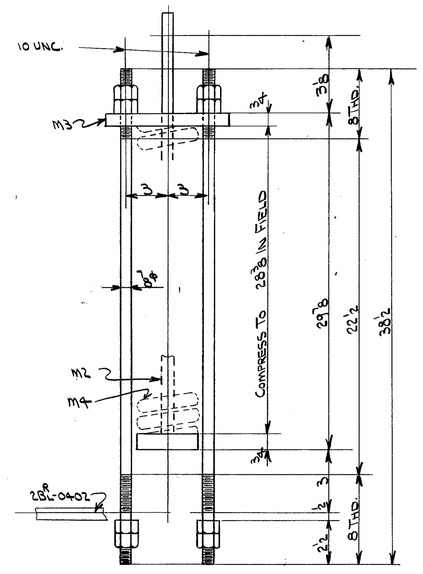

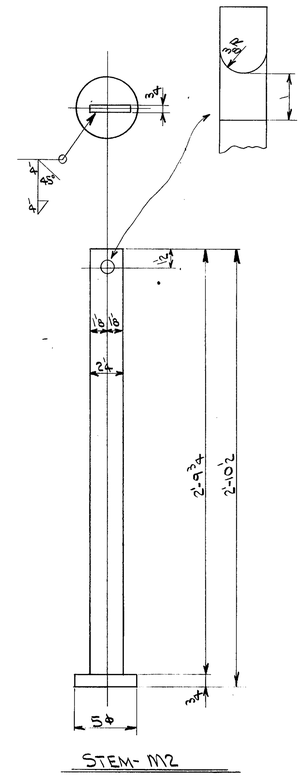

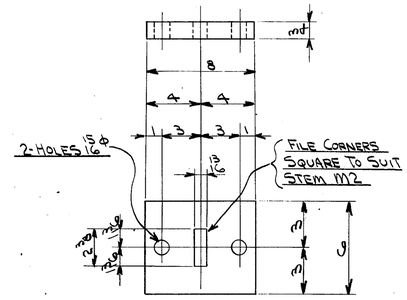

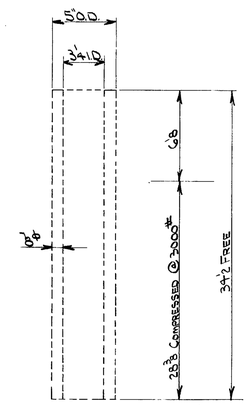

NOTE:
HOLES AS NOTED

BILL OF MATERIAL

LINE	MARK	NO. PCS.	SECTION	LENGTH	WEIGHT	REMARKS	ITEM NO.	PURCH.	ACCT'G.
1									
2									
3			2-SHEAVE BRACKETS 2A^R						
4			ASSEMBLE IN SHOP WITH SHEAVE PINS M5-0409						
5	aa	2	PL 13/4 x 1/2	1 3	57		29-5		
6	ab	2	PL 15 x 1/2	1 3/16	67		29-5		
7	ac	2	PL 13 1/16 x 1/2	1 3	60		29-5		
8	ad	2	BAR 4 3/8 x 1/2	1 0 3/8	16		29-5		
9	af	2	BAR 3/8 x 1/2	0 8	12		29-5		
10	A1	4	1/4 ϕ HEX HD CAP SCREWS	0 1					
11	A2	4	1/4 ϕ SP. LOCKWASHERS						
12			(212)						
13									
14									
15			2-ROLLER BRACKETS-2B						
16			ASSEMBLE IN SHOP WITH ROLLER PINS M1-0409						
17	ak	2	BARS 5 x 3/4	1 9 3/4	44		S		
18	an	8	BARS 4 3/8 x 1/2	0 8 3/4	47		S		
19	as	4	BARS 3 1/2 x 1/2	0 5	8		S		
20	at	4	BARS 5 x 3	0 5 1/2	94		S		
21	A3	8	5/8 ϕ HEX CAP SCREWS	0 1 3/4					
22	A4	8	5/8 ϕ LOCKWASHERS						
23			(198)						
24									
25									
26			2-SPRING YOKES-M1						
27	A1	4	7/8 ϕ BARS x	3 2 1/2	17	8 THD. BOTH ENDS	S		
28	A2	8	7/8 ϕ UNC-10 HEX NUTS						
29	A3	8	7/8 ϕ UNC-10 HEX JAM NUTS						
30			(17)						
31									
32									
33			2-STEMS-M2						
34	ab	2	BARS 2 1/4 x 3/4	2 9 3/4	26		S		
35	ac	2	BARS 5 1/4 x 3/4 THK.		9		S		
36			(BURN FROM 2 BARS 5 1/2 x 3/4 x 0'-5 1/2						
37			(35)						
38									
39									
40			2-YOKE PLATES-M3						
41		2	PL 5 1/4 x 3/4	0 8	24		S		
42			(24)						
43									
44									
45			2-COMPRESSION SPRINGS-M4						
46		2	SPRINGS 5" O.D.						
47			7/8 ϕ WIRE 34 1/2 FREE LENGTH						
48			28 3/8 COMPRESSED @ 3,000#						
49			2.6 COILS SAE 5160 STL.						
50			SQUARE & TAPERED ENDS						
51									
52									
53									
54									
55									
56									
57									
58									
59									
60									
61									
62									
63									
64									
65									
66									
67									
68									
69									
70									
71									
72									
73									
74									
75									
76									
77									
78									
79									
80			PAINT SEE DIV. 8101						
81									
82									
83									
84									
85									
86									
87									
88									
89									
90							4848	15B-66	
91									
92							X		
93									
94							G.A.B. 10-29-91		
95									
96									
97									
98									
99									
100			TOTAL WT.		486				

REV. #	DATE	NAME	DESCRIPTION

THIS DRAWING IS THE PROPERTY OF HEYL & PATTERSON, INC., AND FURNISHED IN CONFIDENCE FOR TEMPORARY USE AND TO BE RETURNED THEREAFTER IF REQUESTED. NOT TO BE COPIED OR DISCLOSED TO OTHERS WITHOUT THE EXPRESS CONSENT OF HEYL & PATTERSON, INC.

5986-3-0403

HEYL & PATTERSON, INC.
CONTRACTING ENGINEERS
PITTSBURGH, U.S.A.

ROTARY RAILROAD CAR DUMPER
DETAILS OF SHEAVE BRACKETS ROLLER BRACKETS, SPRING YOKE
FOR BOARD OF WATER AND LIGHT
FIRST UNIT - DELTA STATION
LANSING, MICHIGAN

DIVISION OAC
MADE G. DOLFI
CHECKED T. LADEIONEZ
APPROVED WEJ

SCALE
DATE 2-14-70 / 4-13-70 / 4-17-70

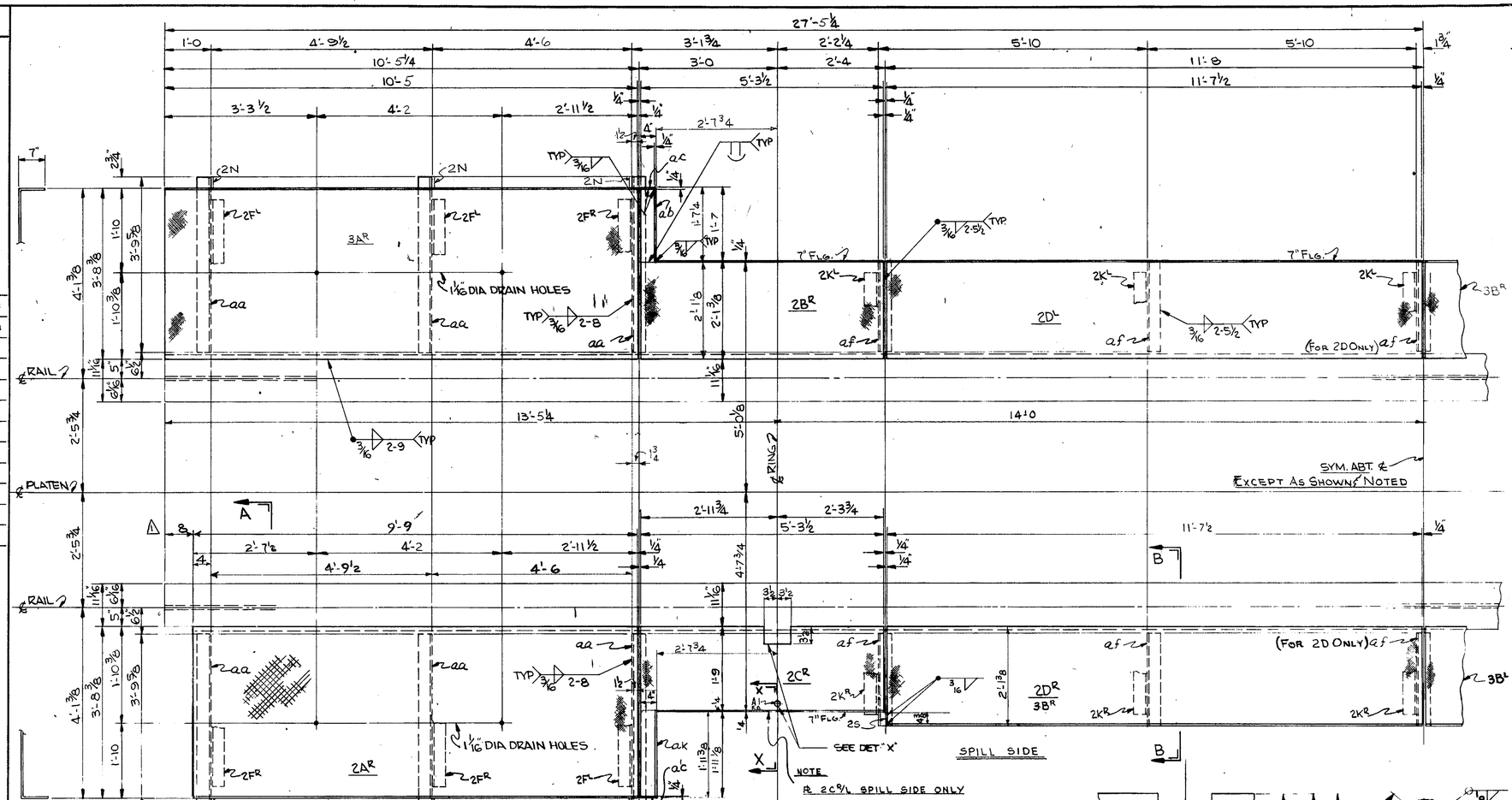

ONE-WALKWAY PLATE-3A^R (SHOWN)
ONE- " " " 3A^L (OPP.)

ONE-WALKWAY PLATES - 2A^R (SHOWN)
ONE- " " - 2A^L (SHOWN)
ONE- " " - 2B^R (SHOWN)
ONE- " " - 2B^L (OPP)

ONE-WALKWAY PLATE - 3B^R (SHOWN)
ONE-WALKWAY PLATE - 3B^L (OPP.)

ONE-WALKWAY PLATES - 2C^R (SHOWN)
ONE- " " - 2C^L (OPP)
ONE- " " - 2D^R (SHOWN) & NOTED
ONE- " " - 2D^L (SHOWN) & NOTED

2-BARS - 2S

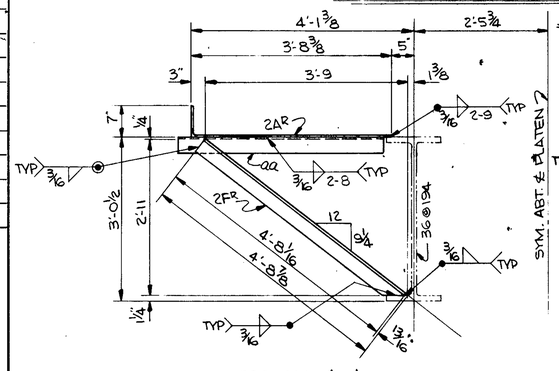

SECTION A-A
6- BRACES - 2F^R (SHOWN)
6- BRACES - 2F^L (OPP.)

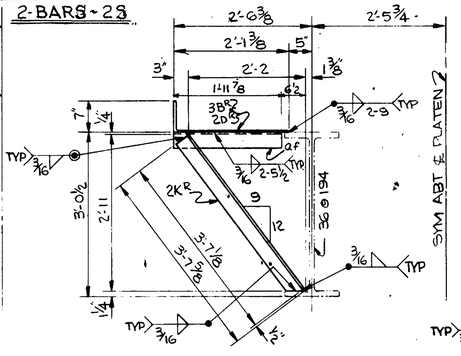

SECTION B-B
5 - BRACES - 2K^R (SHOWN)
5 - BRACES - 2K^L (OPP.)

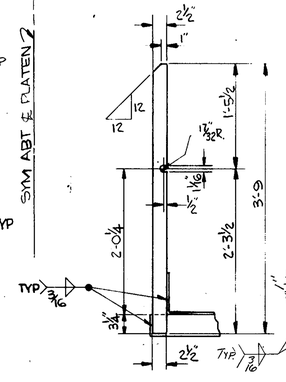

12- H.R. POST - 2N

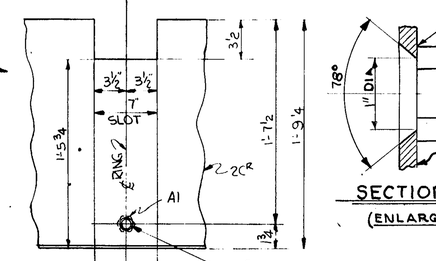

DETAIL - "X"
(ENLARGED)

1" DIA DRILL THRU C'SK FOR ¾" FL HD BOLT

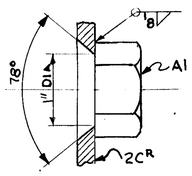

SECTION X-X
(ENLARGED)

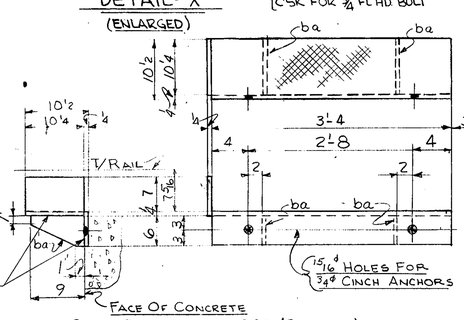

ONE - PLATFORM - 3C^R (SHOWN)
ONE - PLATFORM - 3C^L (OPP.)

NOTE:
HOLES AS NOTED

ASSEMBLY MARKS

aa	ba	ca	da	fa
ab	bb	cb	db	
ac	bc	cc		
ad	bd			
af				
ak				
an				
as				
at				
au				
ax				

SHIPPING MARKS

2A	3A	4A	5A
2B	3B	4B	
2C	3C		
2D			
2F			
2K			
2N			
2S			
2T			
2U			
2X			

BILL OF MATERIAL

LINE	MARK	NO. PCS.	SECTION	LENGTH		WEIGHT	REMARKS	ITEM No
1			2-WALKWAY PLATES - 2A^R					
2		2	CHK. PL 50⅛ × ¼	9	9	950	BEND	5
3	aa	6	∠ 3½ × 3½ × ¼	3	9⅝	132		5
4			(1082)					
5			2-WALKWAY PLATES - 2B^R					
6		2	CHK. PL 31⅛ × ¼	5	3½	316	BEND	5
7	ab	2	CHK. PL 10½ × ¼	1	7¼	32	BEND	5
8	ac	2	BAR 3¾ × ¼	0	6¾	4		5
9			(353)					
10			2-WALKWAY PLATES - 2C^R					
11		2	CHK. PL 27¾ × ¼	5	3½	285	BEND	5
12	ak	2	CHK. PL. 10½ × ¼	1	1⅜	40	BEND	5
13	ac	2	BAR 3¾ × ¼	0	6¾	4		5
14	A1	2	¾ HEX NUT					
15			(329)					
16			4-WALKWAY PLATES - 2/2D^R - 2/3B^R					
17		4	CHK. PL. 31⅛ × ¼	11	7½	1440	BEND	5
18	af	10	∠ 3½ × 3½ × ¼	1	11⅞	116	6 FOR 2D^R 4 FOR 3B^R	5
19			(1556)					
20	2F^R/L	12	∠ 3½ × 3½ × ¼	4	8 1/16	324	BRACE 6-2F^R 6-2F^L	5
21								
22	2K^R/L	10	∠ 3½ × 3½ × ¼	3	7⅝	214	BRACE 5-2K^R 5-2K^L	5
23								
24	2N	12	BAR 2½ × ½	3	9	192	H.R. POSTS	5
25								
26	2T	100	LIN. FT. 1" DIA ROD	RANDOM LENGTHS		267	CUT BEND & WELD IN FIELD	5
27								
28	2S	2	BAR 4⅜ × ¼	0	6¾	5		5
29								
30								
31								
32			2-WALKWAY PL'S - 3A^R					
33		2	CHK'D PL 50⅞ × ¼	10	5	1080	BENT	5
34	aa	6	∠'s			132		5
35			(1212)					
36								
37								
38			2-PLATFORMS - 3C^R					
39		2	CHK'D PL'S 10¼ × ¼	3	11	128	BENT	5
40	ba	4	BARS 6 × ¼	0	9	15		5
41			(143)					
42								
43								
44								
45								
46								
47								
48								
49								
50								
51								
52								
53								
54								
55								
56								
57								
58								
59								
60								
61								
62								
63			PAINT B/M DIV 87					
64								
65								
66								
67								
68								
69								
70								
71								
72								
73				CHKD. PL		4239		
74				STL.		1438		
75				T/WT.		5677		

REV. #	DATE	NAME	DESCRIPTION
1	6-17-71	T.W	8" DIA 1-50 VERIFY LOCATION

THIS DRAWING IS THE PROPERTY OF HEYL & PATTERSON, INC., AND FURNISHED IN CONFIDENCE FOR TEMPORARY USE AND TO BE RETURNED THEREAFTER IF REQUESTED. NOT TO BE COPIED OR DISCLOSED TO OTHERS WITHOUT THE EXPRESS CONSENT OF HEYL & PATTERSON, INC.

5986-3-03/6

HEYL & PATTERSON, INC.
CONTRACTING ENGINEERS
PITTSBURGH, U. S. A.

ROTARY RAILROAD CAR DUMPER
DETAIL OF WALKWAY PLATES

FOR BOARD OF WATER AND LIGHT
FIRST UNIT - DELT STATION
LANSING, MICHIGAN

DIVISION 03
MADE KEN YOEST — SCALE — DATE 2-13-70
CHECKED T.W. CUNNING — " 6-2-70
APPROVED WEL — " 4-13-70

A. GB. SMITH CO., PGH., PA.

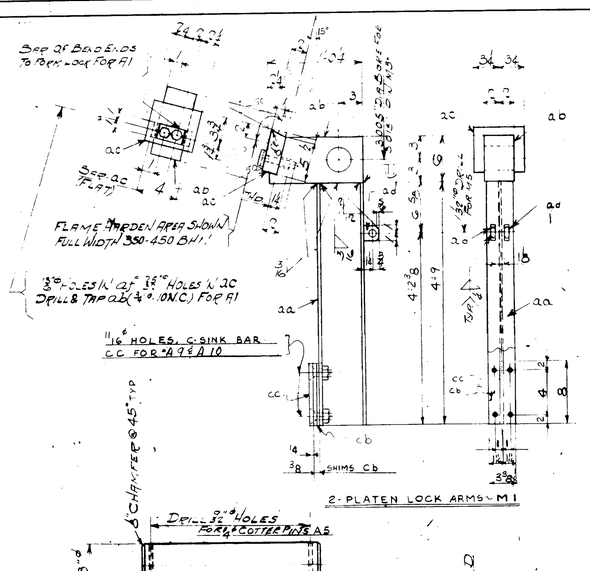

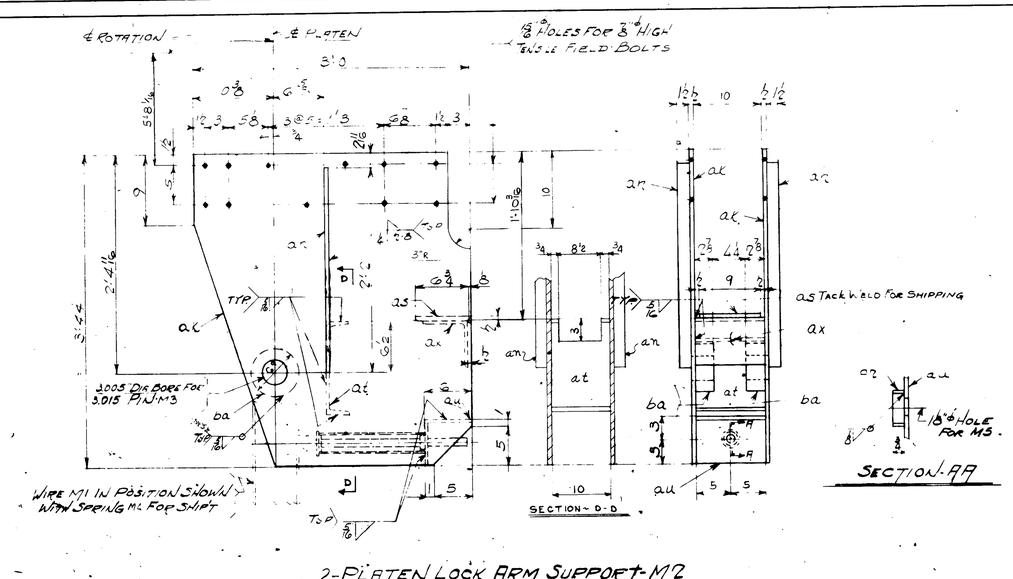

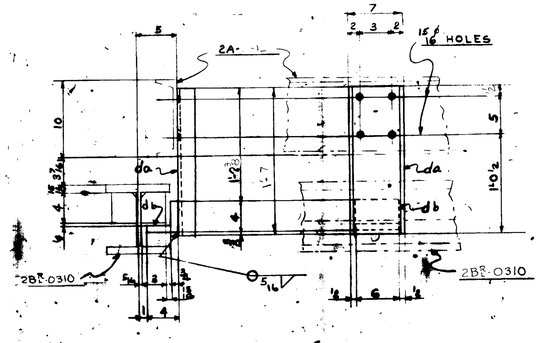

BILL OF MATERIAL

	MARK	AMT	DESCRIPTION	WT.	REQ'D IN SHOP	
1			ASSEMBLE IN SHOP AS PER DWG 0104			
2						
3			2-PLATEN LOCK ARMS-M1		YES	
4	ao	2	6" ⊡ 12.5# x 4'-9	180		
5	ab	2	PL 6 x 4 x 1'-0	160		
6	ac	2	PL 6 x 2 1/2 x 0'-6 1/2 C1045 (FLAME HARDEN)	50		
7	ad	4	BARS 2 x 1/2 x 0'-2	2		
8	af	2	ST. BARS 2 x 3/8 GR. x 0'-4	1		
9	ai	4	3/4" x 3" LG HEX HD CAP SCREWS (10 NC)			
10	cc	2	BAR 3 3/8 x 1/4 x 0'-8 C1045	4	YES	
11	cb	6	BAR 3 3/8 x 1/16 x 0'-8 SHIMS	5	YES	
12			2-PLATEN LOCK ARM SUPPORTS-M2			
13	ak	4	PL 8 x 6 x 1/2 x 3'-4 1/4	83	YES	
14	an	4	BARS 1/2 x 1/2 x 2'-2	25		
15	as	2	PL 6 x 1/2 x 0'-9	16		
16	at	2	⊏ 12 @ 20.7 x 0'-10	30		
17	au	2	∠ 6 x 6 x 3/8 x 0'-10	22		
18	ax	2	∠ 6 x 6 x 3/8 x 0'-10	22		
19	ba	4	BARS 6" DIA. x 2 3/8 LG. H.R. STL.	74		
20	az	2	PCS 2" EX. STR. PIPE x 3/4 LG	1		
21						
22						
23	A3	2	PLATEN LOCK PINS-3 DIA x 12 3/4 LG	46	YES	
24			C1045 T&P STEEL			
25	A5	4	1/4" x 4" LG COTTER PINS			
26	A4	2	PLATEN LOCK SPRINGS-5 1/2" O.D.	11	YES	
27			9/16" WIRE-26 TOTAL COILS			
28			APP. 1'-8 FREE LENGTH			
29			DESIGN LOAD 150 @ 1'-8"			
30			ENDS FLATTENED & GROUND			
31			COIL COMPRESSION SPRING			
32			C5160 SPRING STEEL			
33	A6	4	1/8" x 1 1/2 LG COTTER PINS			
34			2-PLATEN LOCK SPRING PINS-M5		YES	
35	A3	2	BARS-1" x 1 1/10 LG. C.F.S.	3		
36	A4	2	BARS-1" x 0'-2 1/2 LG. C.F.S.	1		
37	bb	2	BARS-2" x 0'-1 LG.	2		
38	bc	2	BARS-2 1/2" DIA. x 1/2 THK.	2		
39	bd	2	BARS-3 1/2 DIA. x 1/4 THK.	3		
40						
41						
42	M6	2	RACKS-6 1/2 x 3 x 1'-11 C1045	238		
43			FLAME HARDENED TEETH TO			
44			350-450 B.HN. (AFTER MACH.)			
45	A7	8	3/4" x 2 3/8" LG SLOTTED FL HD BOLTS			
46	A8	8	3/4" SPLIT LOCK WASHERS			
47	A9	8	5/8" x 2 1/8" LG SLOTTED FL HD BOLTS IN NUTS			
48	A10	8	5/8" STD DBV. WASHERS			
49						
50			4-PLATEN HOLD DOWNS-2B			
51	da	4	C 7 @ 14.75 x 1"	90		
52	db	4	L 4 x 4 x 3/4 x 0'-6 LG	37		
53						
54			PAINT S/M DIV 87			
55						
56						
57						
58						
59						

NOTE: HOLES AS NOTED

5986-3-0318

HEYL & PATTERSON

BOARD OF WATER AND LIGHT
FIRST UNIT - DELTA STATION
LANSING, MICHIGAN

KEN YOST

D-1057

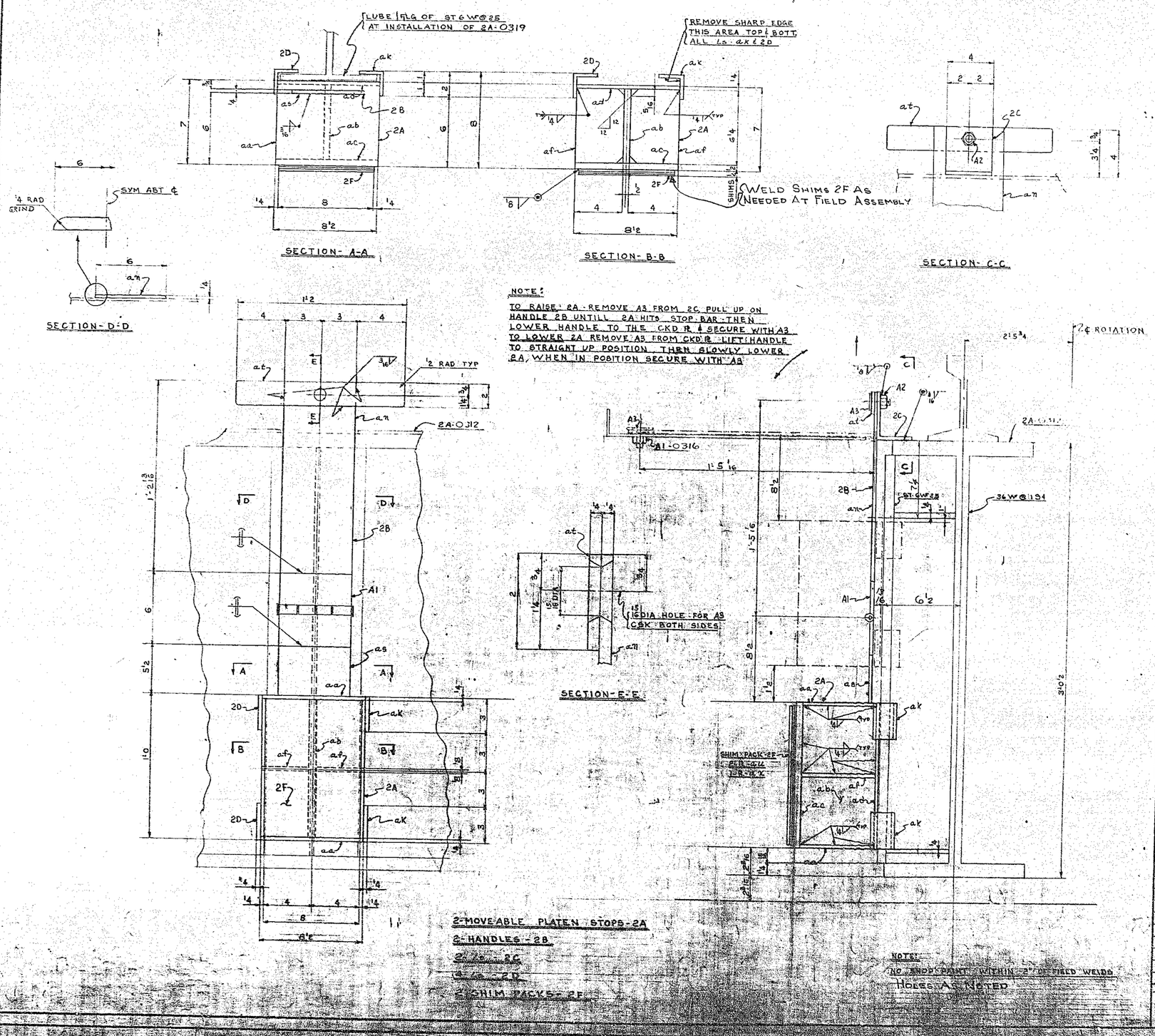

ASSEMBLY MARKS

aa	ba	ca	da	fa
ab	bb	cb	db	
ac	bc	cc		
ad	bd			
af				
ak				
aq				
as				
at				
an				

SHIPPING MARKS

2A	3A	4A	5A
2B	3B	4B	
2C	3C		
2D			
2E			
2K			
2N			
2S			
2T			
2U			
2X			

BILL OF MATERIAL

LINE	MARK	NO PCS	SECTION	LENGTH	WEIGHT	REMARKS
1						
2			2-MOVEABLE PLATEN STOPS-2A			
3	aa	4	PL 6'4 X 1'4	0 8'2	31	
4	ab	2	PL 6'4 X 1'2	0 11'2	20	
5	ac	2	PL 8'2 X 1'2	1 0	30	
6	ad	2	PL 8'2 X 1'4	1 0	15	
7	af	4	BAR 4 X 1'4	0 6'4	7	
8	ak	4	Ls 2 X 2 X 1'4	0 3	3	
9			105			
10						
11			2-HANDLES-2B			
12	an	2	BAR 6 X 1'4	1 2 3/16	13	
13	as	2	BAR 5'2 X 1'4	0 6	4	
14	at	2	BAR 2 X 1'4	1 2	3	
15	A1	2	EXTRA HEAVY			
16			BLANK FLAT			
17			BACK TIGHT PIN			
18			HINGES 6 X 6 ST.			
19			MC KINNEY 706			
20			OR EQUAL			
21	A3	2	3/4" SL FL HD BOLTS	0 3'2		
22			20			
23	2C	2	Ls 4 X 3 X 1'4	0 4	4	
24	A2	2	3/4" HEX NUTS			
25	2D	4	Ls 2 X 2 X 1'4	0 3	3	
26						
27						
28			2-SHIM PACKS-2F			
29	au	4	PL 8 X #10 GA	0 11'2	13	
30	av	2	PL 8 X 1'4	0 11'2	13	
31			26			
32						
33						
34						
35						
36						
37						
38						
39						
40						
41						
42						
43						
44						
45						
46						
47						
48						
49						
50						
51						
52						
53						
54						
55						
56						
57		1	ITEM CHASSIS LOOP		115	
58						
59						
60						
61						
62						
63						
64						
65			PAINT B/M DIV 87			
66						
67						
68						
69						
70						
71						
72						
73						
74						
75				WT	158	

5986-3-0319

HEYL & PATTERSON INC
CONTRACTING ENGINEERS
PITTSBURGH, PA. U.S.A.

ROTARY RAILROAD CAR DUMPER
GAS & DIESEL OPERATED
CAPACITY 8 TOP

FOR BOARD OF WATER AND LIGHT
FIRST UNIT - DELTA STATION
LANSING MICHIGAN

DRAWN L. SCHOLL
MADE KEN TOEST
DIRECTED T. W.
APPROVED

REV. #	DATE	NAME	DESCRIPTION

THIS DRAWING IS THE PROPERTY OF HEYL & PATTERSON, INC. AND FURNISHED IN CONFIDENCE FOR TEMPORARY USE AND TO BE RETURNED THEREWITH OR WHENEVER REQUESTED. NOT TO BE COPIED OR DISCLOSED TO OTHERS WITHOUT THE WRITTEN CONSENT OF HEYL & PATTERSON, INC.

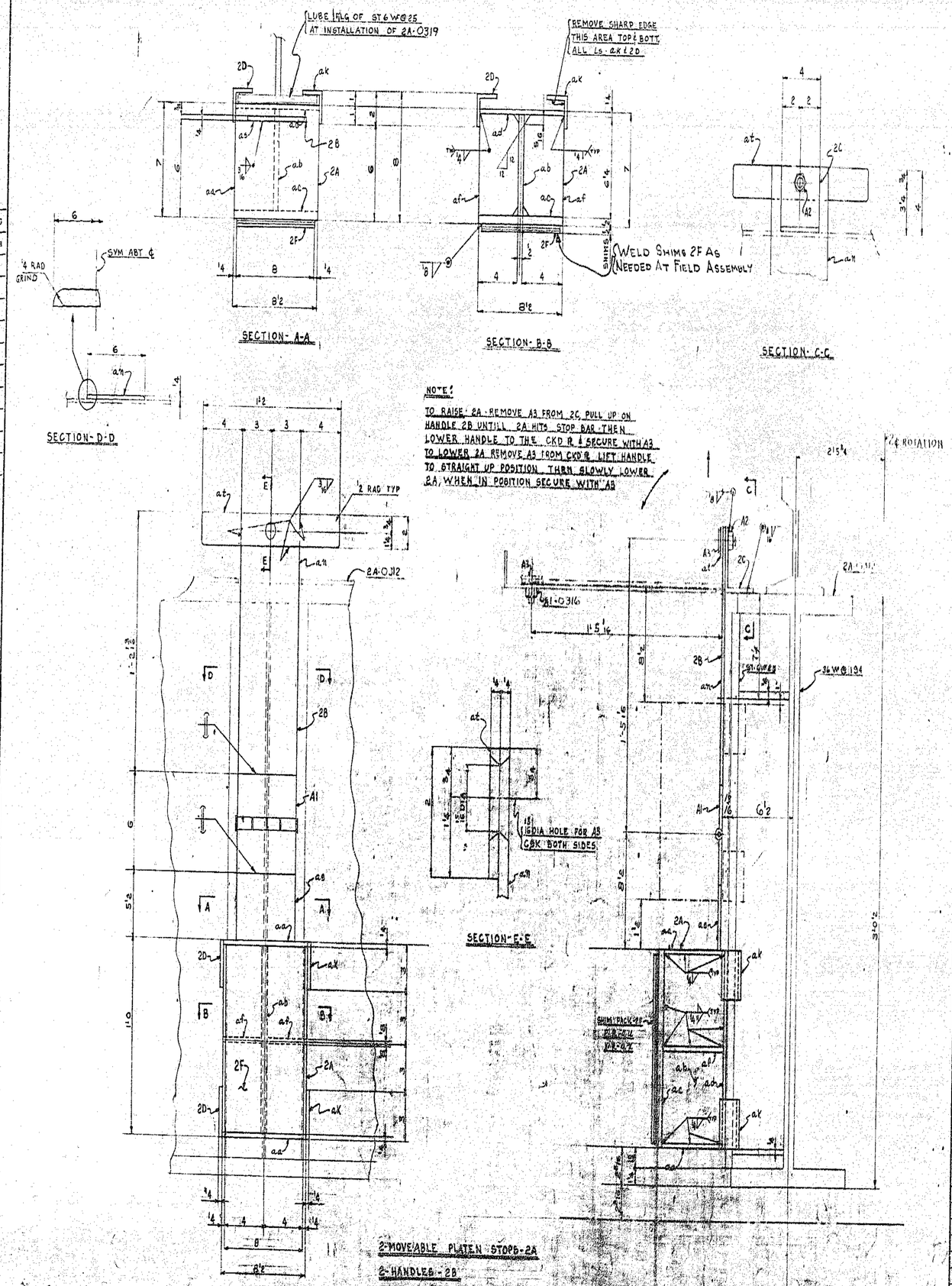

ASSEMBLY MARKS				
ba	ba	ca	da	fa
bb	bb	cb	db	
bc	bc	cc		
bd	bd			
bf				
bk				
bn				
bq				
bt				
bu				
bx				

SHIPPING MARKS			
2A	3A	4A	5A
2B	3B	4B	
2C	3C		
2D			
2E			
2K			
2N			
2S			
2T			
2U			
2X			

BILL OF MATERIAL

LINE	MARK	NO. PCS.	SECTION	LENGTH	WEIGHT	REMARKS
1						
2			2-MOVEABLE PLATEN STOPS-2A			
3	aa	4	PL 6¼ X ¼	0 8½	31	S
4	ab	2	PL 6¼ X ½	0 11½	20	29-S
5	ac	2	PL 8½ X ¼	1 0	30	29-S
6	ad	2	PL 6½ X ¼	1 0	15	S
7	af	4	BAR 4 X ¼	0 6¼	7	S
8	ak	4	Ls 2 X 2 X ¼	0 3	3	S
9			105			
10						
11			2-HANDLES-2B			
12	an	2	BAR 6 X ¼	1 2 3/16	13	S
13	as	2	BAR 3½ X ¼	0 6	4	S
14	at	2	BAR 2 X ¼	1 2	3	S
15	A1	2	EXTRA HEAVY			
16			BLANK FLAT			
17			BACK TIGHT PIN			
18			HINGES 6 X 6 STL.			
19			McKINNEY 706			
20			OR EQUAL			
21	A3	2	¾ ϕ SL FL.HD BOLTS	0 3½		
22			20			
23	2C	2	Ls 4 X 3 X ¼	0 4	4	
24	A2	2	¾ ϕ HEX NUTS			
25	2D	4	Ls 2 X 2 X ¼	0 3	3	
26						
27						
28			2-SHIM PACKS-2F			
29	aU	4	PL 8 X #10 GA	0 11½	13	
30	aV	2	PL 8 X ¼	0 11½	13	
31			26			
57			1 ITEM CHASSIS WGT.		1LB	
65			PAINT B/M DIV 87			
75					WT 158	

5986-3-0319

HEYL & PATTERSON
CONTRACTING ENGINEERS
PITTSBURGH, PA.

ROTARY RAILROAD CAR DUMPER
GAS & DEBRIS CONVEYOR
PLATEN STOP

FOR BOARD OF WATER AND LIGHT
FIRST UNIT - DELTA STATION
LANSING, MICHIGAN

DRAWN BY KEN WEST 2-13-80
CHECKED 2-13-80
APPROVED 2-13-80

REV. #	DATE	NAME	DESCRIPTION

THIS DRAWING IS THE PROPERTY OF HEYL & PATTERSON, INC. AND FURNISHED IN CONFIDENCE FOR THE USE AND TO BE RETURNED THEREWITH AS REQUESTED. NOT TO BE COPIED OR DISCLOSED TO OTHERS WITHOUT THE EXPRESS CONSENT OF HEYL & PATTERSON, INC.

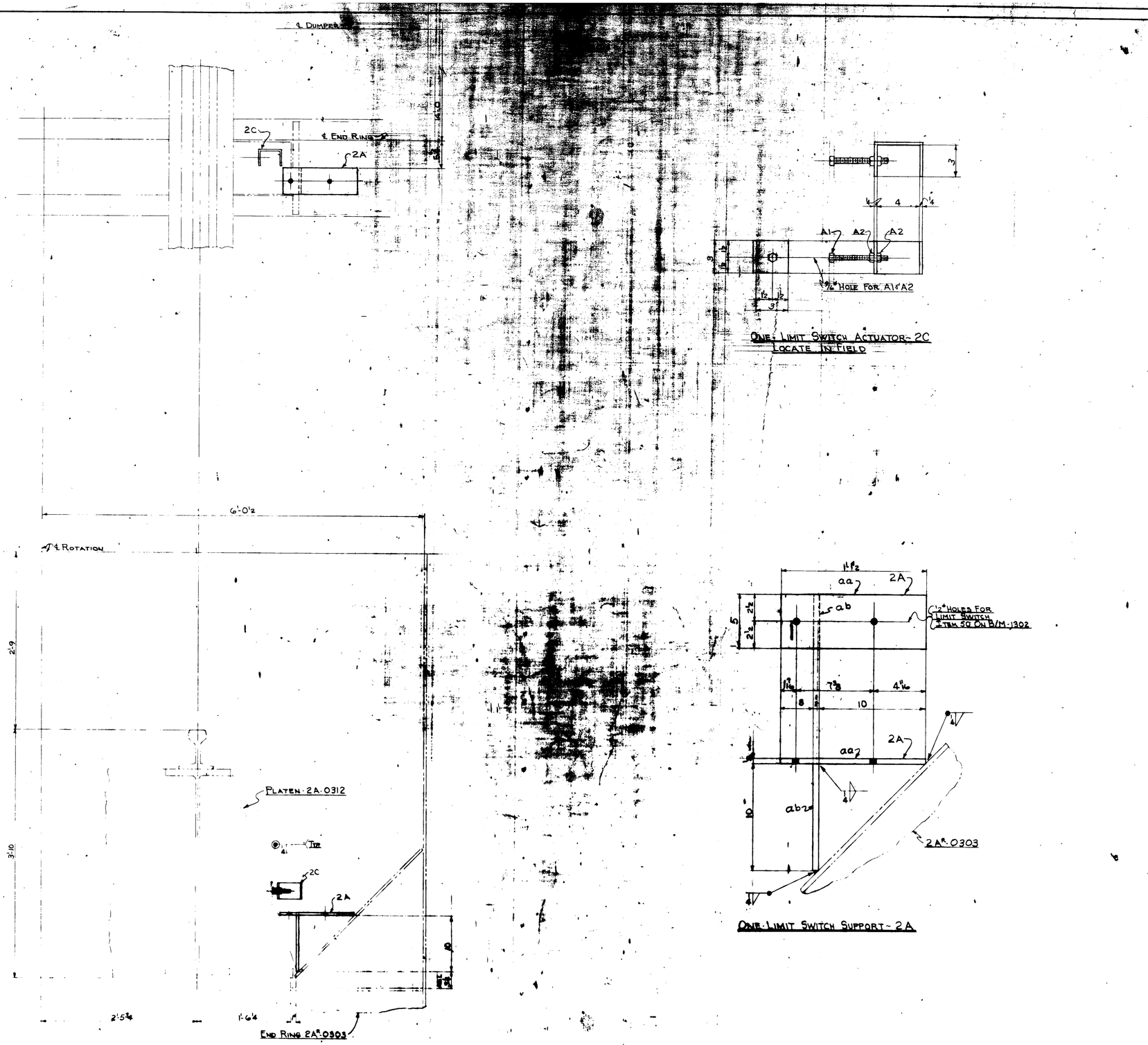

GEN. ARRG'T PLATEN SEATED LIMIT SWITCH
℄ ACTUATOR (ENTRY END REAR TRUSS SIDE ONLY)

NOTE:
HOLES AS NOTED

SHIPPING MARKS			
2A	3A	4A	5A
2B	3B	4B	
2C	3C		
2D			
2F			
2K			
2N			
2S			
2T			
2U			
2X			

ASSEMBLY MARKS				
aa	ba	ca	da	fa
ab	bb	cb	db	
ac	bc	cc		
ad	bd			
af				
ak				
an				
as				
at				
au				
ax				

BILL OF MATERIAL

LINE	MARK	NO. PCS.	SECTION	LENGTH	WEIGHT	REMARKS	ITEM NO.	PURCH.	ACCTG.
1									
2									
3			ONE-LIMIT SWITCH SUPPORT-2A						
4	aa	1	BAR 5x½	1 12	9		5		
5	ab	1	BAR 5x½	0 10	7		5		
6			(16)						
7									
8			ONE-LIMIT SWITCH ACTUATOR-2C						
9	aC	1	BAR 3x¼	0 10	3	BENT	5		
10	A1	1	½ø BOLT	0 5					
11	A2	2	½ø HVY. HEX. NUTS						
12									
13	REF		1-PLATEN SEATED LIMIT SWITCH						
14			ITEM 50 B/M-1302						
94			NO SHOP PAINT						
100			TOTAL WEIGHT		19				

4843 15-8-78

10-29-9

REV. #	DATE	NAME	DESCRIPTION

THIS DRAWING IS THE PROPERTY OF HEYL & PATTERSON, INC., AND FURNISHED IN CONFIDENCE FOR TEMPORARY USE AND TO BE RETURNED THEREAFTER IF REQUESTED. NOT TO BE COPIED OR DISCLOSED TO OTHERS WITHOUT THE EXPRESS CONSENT OF HEYL & PATTERSON, INC.

5986-3-0320

HEYL & PATTERSON, INC.
CONTRACTING ENGINEERS
PITTSBURGH, U.S.A.

ROTARY RAILROAD CAR DUMPER
DETAIL OF PLATEN SEATED SWITCH
SUPPORT & ACTUATOR
FOR BOARD OF WATER AND LIGHT
PRIMAT UNIT - DELTA STATION
LANSING, MICHIGAN

DIVISION 03 SCALE
MADE Ken Yost DATE
CHECKED
APPROVED

SHIPPING MARKS			
2A	3A	4A	5A
2B	3B	4B	
2C	3C		
2D			
2F			
2K			
2N			
2S			
2T			
2U			
2X			

ASSEMBLY MARKS				
aa	ba	ca	da	fa
ab	bb	cb	db	
ac	bc	cc		
ad	bd			
af				
ak				
an				
as				
at				
au				
ax				

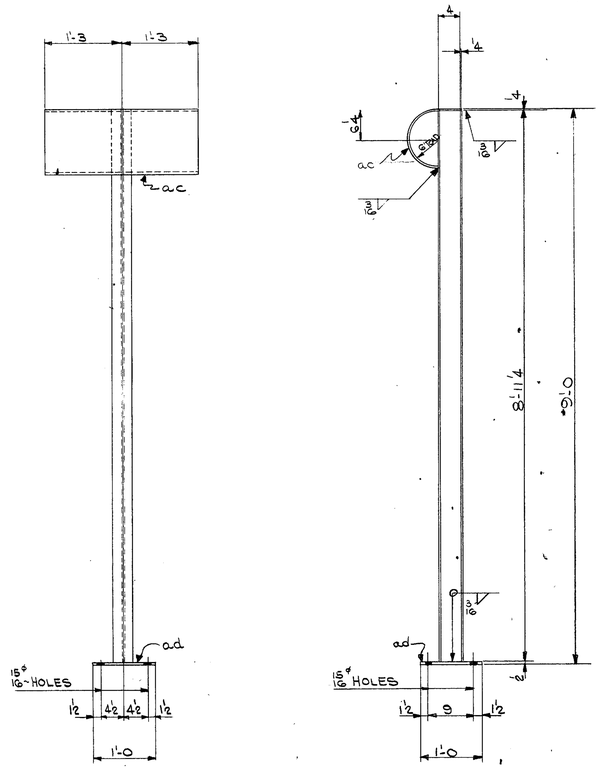

ONE ~ PLATEN WIRE POST ~ 2A

NOTE:
HOLES AS NOTED

BILL OF MATERIAL

LINE	MARK	NO. PCS.	SECTION	LENGTH	WEIGHT	REMARKS	ITEM NO.	PURCH.	ACCT'G.
5			ONE ~ PLATEN WIRE POST 2A						
6		1	4 I 7.7	8 11¼	68		14		
7	ac	1	PL 23 x ¼	2 6	50		5		
8	ad	1	PL 12 x ½	1 0	21		2.95		
9			(139)						
88						1643	158.00		
90						X			
92						J.A.B. 10-29-71			
100			TOTAL WT.		139				

REV. #	DATE	NAME	DESCRIPTION

THIS DRAWING IS THE PROPERTY OF HEYL & PATTERSON, INC., AND FURNISHED IN CONFIDENCE FOR TEMPORARY USE AND TO BE RETURNED THEREAFTER IF REQUESTED. NOT TO BE COPIED OR DISCLOSED TO OTHERS WITHOUT THE EXPRESS CONSENT OF HEYL & PATTERSON, INC.

5986-3-0322

HEYL & PATTERSON, INC.
CONTRACTING ENGINEERS
PITTSBURGH, U.S.A.

ROTARY RAILROAD CAR DUMPER
DETAIL OF PLATEN WIRE POST

FOR BOARD OF WATER & LIGHT
FIRST UNIT ~ DELTA STATION
LANSING, MICHIGAN

DIVISION 03 SCALE 1"
MADE G. DOLEI DATE 2-10-70
CHECKED W. INGLINER " 2-10-70
APPROVED W.F. " 2-10-70

ORIGINAL - PITTSBURGH

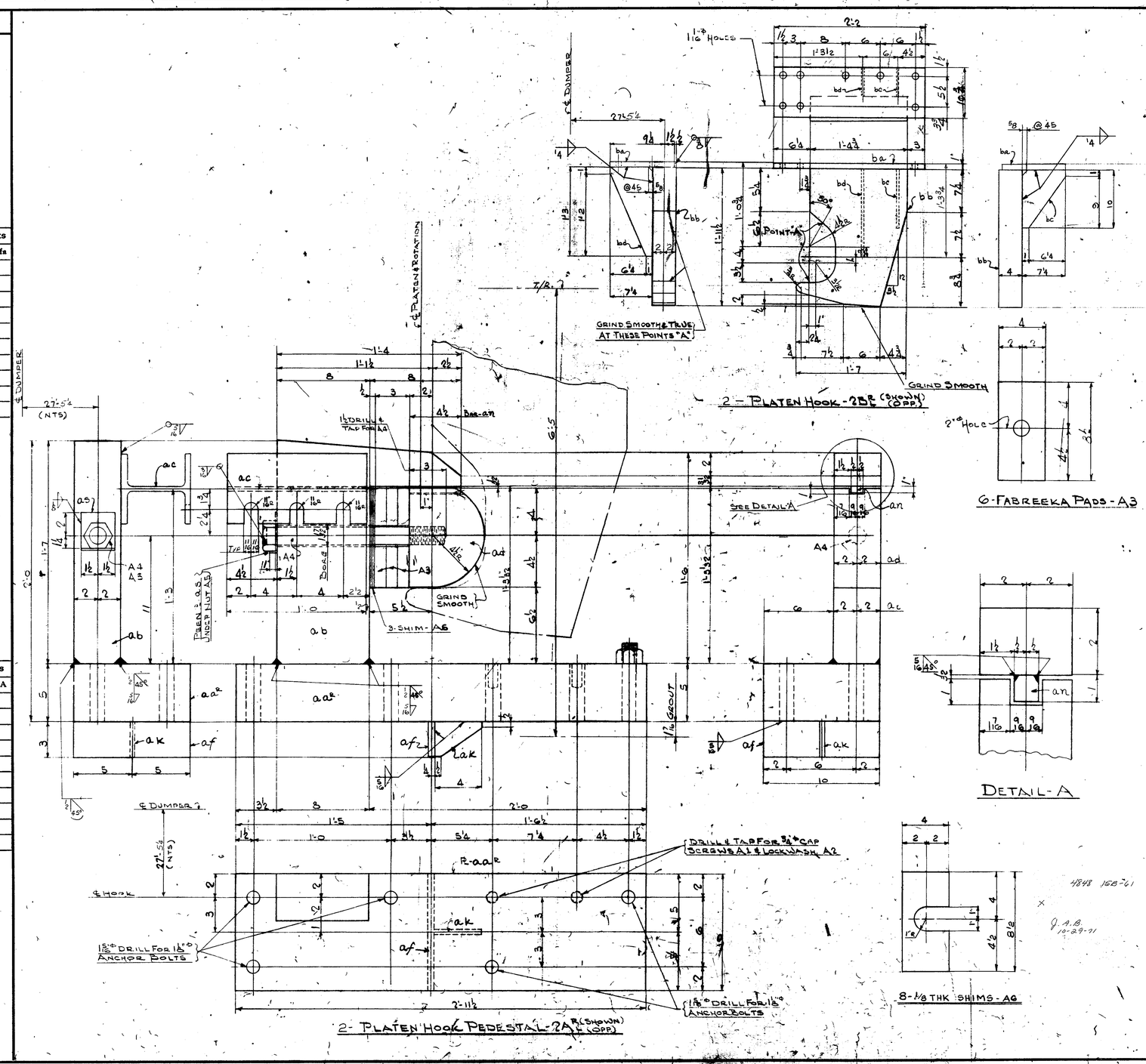

ASSEMBLY MARKS				
aa	ba	ca	da	fa
ab	bb	cb	db	
ac	bc	cc		
ad	bd			
af				
ak				
an				
as				
at				
au				
ax				

SHIPPING MARKS			
2A	3A	4A	5A
2B	3B	4B	
2C	3C		
2D			
2F			
2K			
2N			
2S			
2T			
2U			
2X			

BILL OF MATERIAL

LINE	MARK	NO. PCS.	SECTION	LENGTH	WEIGHT	REMARKS	ITEM NO.	PURCHASING	ACCT.
1			2-PLATEN HOOK PEDESTALS-2A						
2			ASSY IN SHOP WITH M1 & M2-034						
3	aa	2	PL - 10 x 5	2	11½	1030	S		
4	ab	2	PL - 16 x 4	1	7	707	S		
5	ac	2	WF - 12 @ 27	1	0	54	10-5		
6	ad	2	PL - 7 x 4	0	9	145	S		
7	af	2	BAR - 3 x ½	0	10	9	S		
8	ak	2	BAR - 3 x ¾	0	4	10	S		
9	an	2	BAR - 1 x 1	0	4½	3	S		
10	as	2	BAR - 3 x 7/16	0	4½	2	S		
11			(1960)						
12									
13									
14	A1	4	¾" HEX HD CAP SCR	0	2½				
15	A2	4	¾" SP. LOCKWASH						
16	A3	6	FABREEKA 4 x 1	0	8½				
17	A4	2	1½" THD STUDS	1	8½				
18	A5	2	1½" HEX NUTS						
19	A6	8	PL - 4 x ½	0	8½	30 (SHIMS)	S		
20									
21									
22			2-PLATEN HOOKS-2B						
23	ba	2	PL 10¾ x 1	2	2	128	S		
24	bb	2	PL - 19 x 4	1	11½	1025	S		
25			(CUT bb FROM MAT'L REMAINING						
26			FROM DRUM BAND M1-0407)						
27	bc	2	PL 7¼ x 12	0	10	20	295		
28	bd	2	PL 7¼ x 12	1	3	30	295		
29			1203						
30									
31									
32									
33									
34									
35									
36									
37									
38									
39									
40									
41									
42									
43									
44									
45									
46									
47									
48									
49									
50									
51									
52									
53									
54									
55									
56									
57									
58									
59									
60			SHOP PAINT						
61			SEE SHOP BILLS - DIV. 87						
62									
63									
64									
65									
66									
67									
68									
69									
70									
71									
72									
73									
74									
75						3193			

REV. #	DATE	NAME	DESCRIPTION

THIS DRAWING IS THE PROPERTY OF HEYL & PATTERSON, INC., AND FURNISHED IN CONFIDENCE FOR TEMPORARY USE AND TO BE RETURNED THEREAFTER IF REQUESTED. NOT TO BE COPIED OR DISCLOSED TO OTHERS WITHOUT THE EXPRESS CONSENT OF HEYL & PATTERSON, INC.

5986-3-0323

HEYL & PATTERSON, INC.
CONTRACTING ENGINEERS
PITTSBURGH, U.S.A.

ROTARY GAS DUMPER
DETAILS OF PLATEN HOOK & PLATEN PEDESTAL
FOR BOARD OF WATER AND LIGHT
FIRST UNIT - DELTA STATION
LANSING, MICHIGAN

DIV. 03
MADE KEN TOBST
CHECKED T. WEIDNER
APPROVED WMC

SCALE
DATE 2-17-70
2-17-70
2-13-70

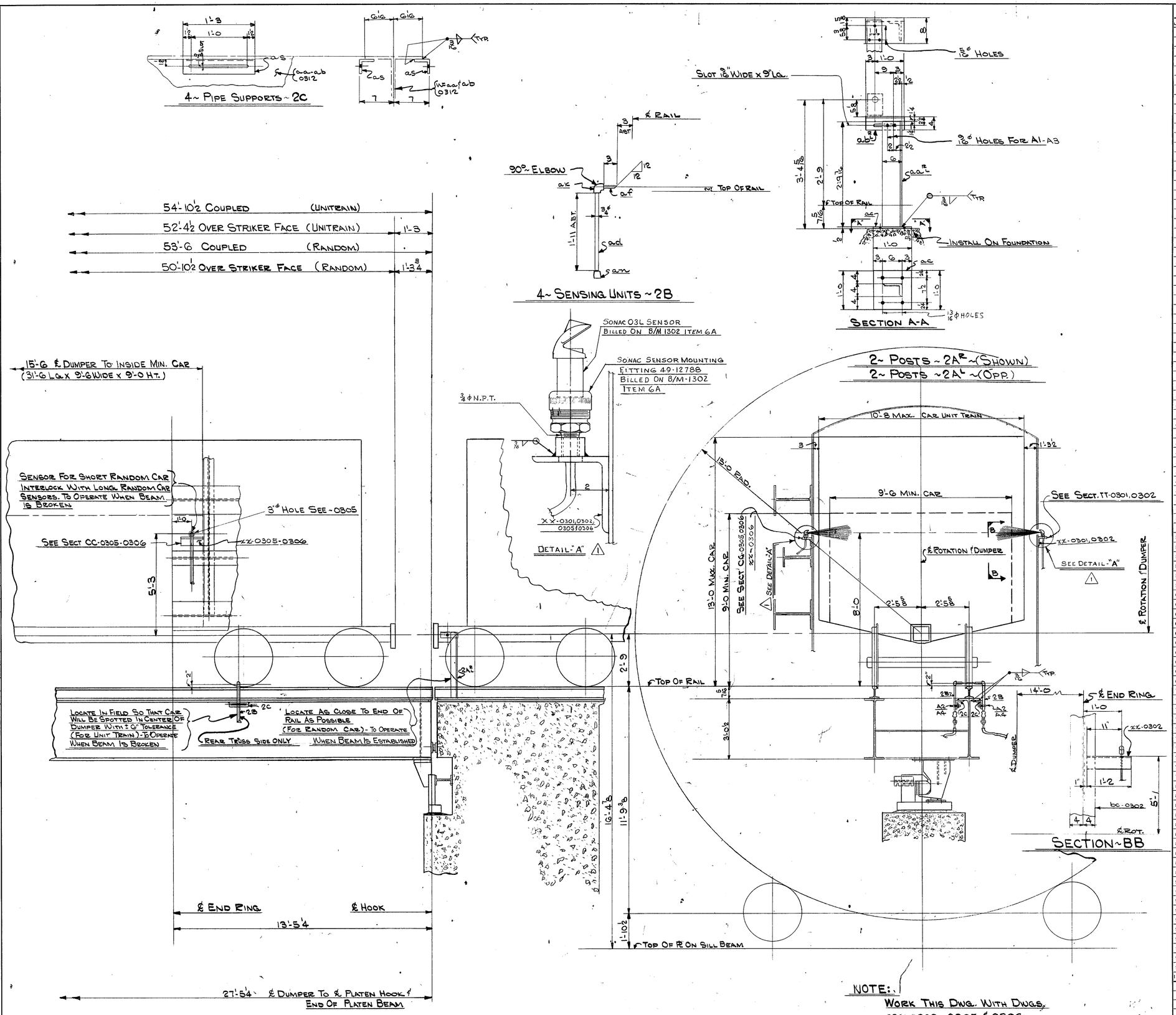

Shipping Marks			
2A	3A	4A	5A
2B	3B	4B	
2C	3C		
2D			
2F			
2K			
2N			
2S			
2T			
2U			
2X			

Assembly Marks				
aa	ba	ca	da	fa
ab	bb	cb	db	
ac	bc	cc		
ad	bd			
af				
ak				
an				
as				
at				
au				
ax				

NOTE:
Work This Dwg. With Dwgs. 0301.0302, 0305 & 0306 For Final Location Of Car Sensors

All Holes As Noted

Bill of Material

Line	Mark	No. Pcs.	Section	Length		Weight	Remarks	Item No.	Purch.	Acct'g.
1										
2										
3										
4			2~ Posts ~ 2A^R (Shown)							
5			2~ Posts ~ 2A^L (Opp.)							
6	aa	4	∠s 4x4x5/16	2	9/16	120		5		
7	ab	4	∠s 8x4x7/16	1	3	70		5		
8	ac	4	PL 12x1/2	1	0	80		5		
9	A1	4	1/2" ϕ A325 Bolts	0	1½					
10	A3	4	1/2" ϕ Flat Washers							
11			(270)							
12										
13			4~ Sensing Units ~ 2B							
14	ad	4	Pcs Pipe 3/4" ϕ	2	0		Thd. Both Ends			
15	af	4	Pcs Pipe 3/4" ϕ	0	3		Thd. 1~End			
16	ak	4	90° Elbows 3/4" ϕ							
17	an	4	2x3/4 Red Couplings							
18										
19	A2	4	1/2" Bolts For 3/4" Pipe ~ H4075 Or Equal							
20			5/8" x 2 1/16 Inside Lgth. ~ 0~2 Cat.							
21	A4	8	5/8" ϕ Flat Washers				(Ship With 2C)			
22										
23			4~ Pipe Supports ~ 2C							
24	as	4	∠s 3x3x5/16	1	3	25		5		
25			(25)							
26										
27										
28										
29										
30										
31										
32										
33										
34										
35										
36										
37										
38										
39										
40										
41										
42										
43										
44										
45										
46										
47										
48										
49										
50										
51										
52										
53										
54										
55										
56										
57										
58										
59										
60										
61										
62										
63										
64										
65										
66										
67										
68										
69										
70										
71										
72										
73										
74										
75										
76										
77										
78										
79										
80			For Shop Paint See Div 87							
81										
82										
83										
84										
85										
86										
87										
88							4848	15B-6A		
89										
90										
91										
92										
93										
94										
95										
96										
97										
98										
99										
100			Total W.T.			295				

Rev. #	Date	Name	Description
1	1-14-71	S.K.K.	Detail "A" Added

THIS DRAWING IS THE PROPERTY OF HEYL & PATTERSON, INC., AND FURNISHED IN CONFIDENCE FOR TEMPORARY USE AND TO BE RETURNED THEREAFTER IF REQUESTED. NOT TO BE COPIED OR DISCLOSED TO OTHERS WITHOUT THE EXPRESS CONSENT OF HEYL & PATTERSON, INC.

5986-3-0324

Heyl & Patterson, Inc.
Contracting Engineers
Pittsburgh, U.S.A.

Rotary Railroad Car Dumper & Details Of Car Spotter & Sensors
For Board Of Water Light & Power
First Unit - Delta Station
Lansing, Michigan

Division 03 Scale 1/4"
Made S. Dolfi Date 4-28-70
Checked T. Wagner Date 4-27-70
Approved Date 5-8-70

DILLIGAN · PITTSBURGH

SHIPPING MARKS			
2A	3A	4A	5A
2B	3B	4B	
2C	3C		
2D			
2F			
2K			
2N			
2S			
2T			
2U			
2X			

ASSEMBLY MARKS				
aa	ba	ca	da	fa
ab	bb	cb	db	
ac	bc	cc		
ad	bd			
af				
ak				
an				
as				
at				
au				
ax				

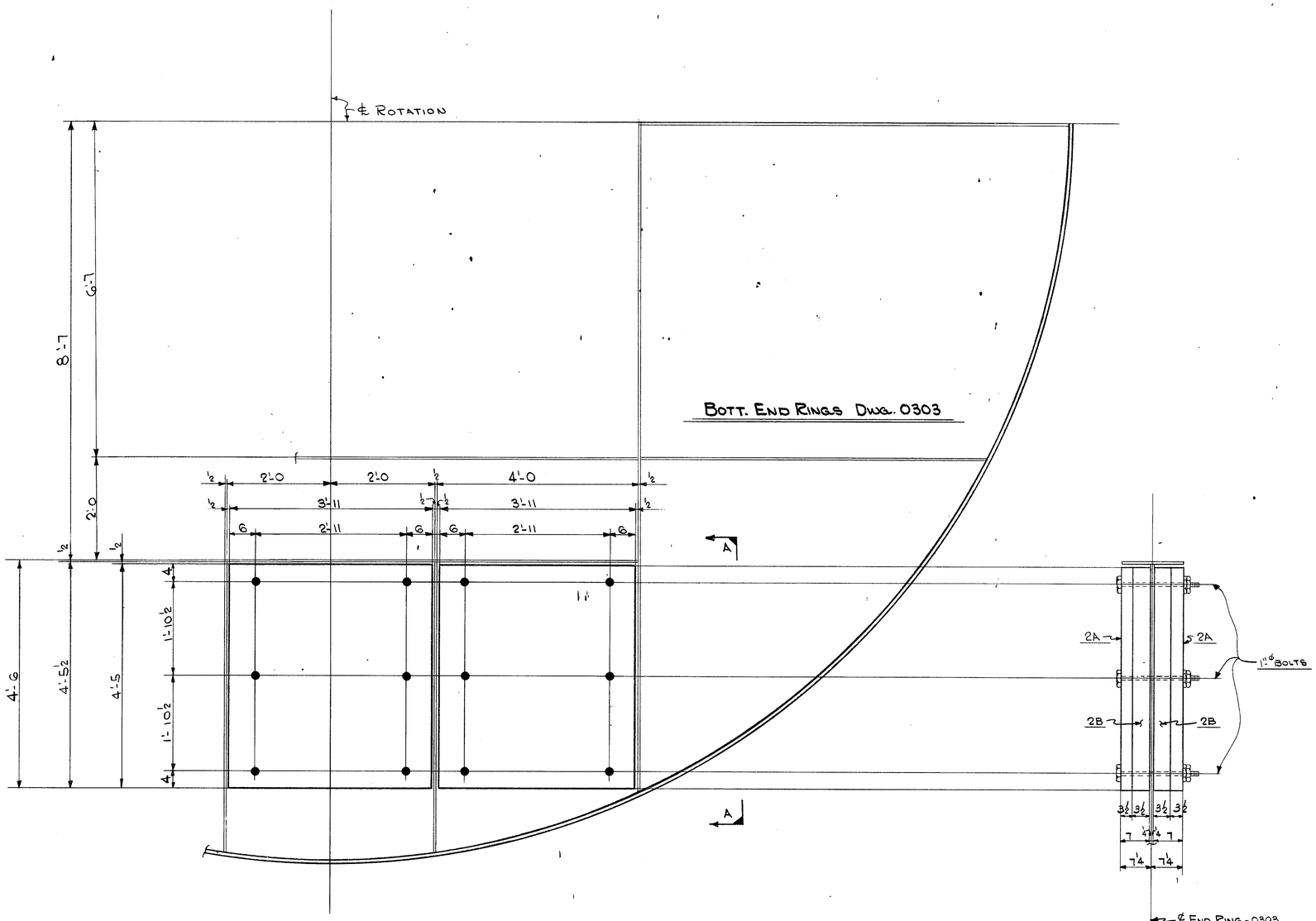

ARRG'T. & DETAIL OF END RING CWT. SLABS

8~ SLABS ~2A & 8~ SLABS 2B

SECTION ~ A A

GENL. NOTES:

ALL HOLES 1⅛ DIA.
STACK TO DRILL
LOCATE HOLES IN END RINGS FROM CWTS.
IN SHOP ~ SHIP CWT. SEPARATE
HAND CLEAN BEFORE PAINTING

BILL OF MATERIAL

LINE	MARK	NO. PCS.	SECTION	LENGTH	WEIGHT	REMARKS	ITEM NO.	PURCH.	ACCT'G.
1									
2									
3									
4									
5			CWT. SLABS ~ 2A & 2B						
6									
7	2A	8	SLABS 4"x3½	4 5	20125				
8									
9	2B	8	SLABS 4"x3½	4 5	20125				
10			(40,250)						
11									
12									
13									
14									
15									
16									
17									
18									
19									
20									
21									
22									
23									
24									
25									
26									
27									
28									
29									
30									
31									
32									
33									
34									
35									
36									
37									
38									
39									
40									
41									
42									
43									
44									
45									
46									
47									
48									
49									
50									
51									
52									
53									
54									
55									
56									
57									
58									
59									
60									
61									
62									
63									
64									
65									
66									
67									
68									
69									
70									
71									
72									
73									
74									
75									
76									
77									
78									
79									
80									
81									
82									
83									
84									
85									
86			SHOP PAINT ~						
87			SEE B/M 87						
88									
89						4848	158-63		
90									
91									
92						Q. A.B. 10-29-71			
93									
94									
95									
96									
97									
98									
99									
100			T/W		40,250				

REV. #	DATE	NAME	DESCRIPTION

THIS DRAWING IS THE PROPERTY OF HEYL & PATTERSON, INC., AND FURNISHED IN CONFIDENCE FOR TEMPORARY USE AND TO BE RETURNED THEREAFTER IF REQUESTED. NOT TO BE COPIED OR DISCLOSED TO OTHERS WITHOUT THE EXPRESS CONSENT OF HEYL & PATTERSON, INC.

5986-3-0325

HEYL & PATTERSON, INC.
CONTRACTING ENGINEERS
PITTSBURGH, U.S.A.

ROTARY RAILROAD CAR DUMPER
ARRG'T. & DET. OF CWT. SLABS

FOR BOARD OF WATER & LIGHT
FIRST UNIT DELTA STATION
LANSING, MICHIGAN

DIVISION 03 SCALE 1"
MADE G. DOLEI DATE 4-28-70
CHECKED J.P. FONTAL " 4-28-70
APPROVED WMT " 4-28-70

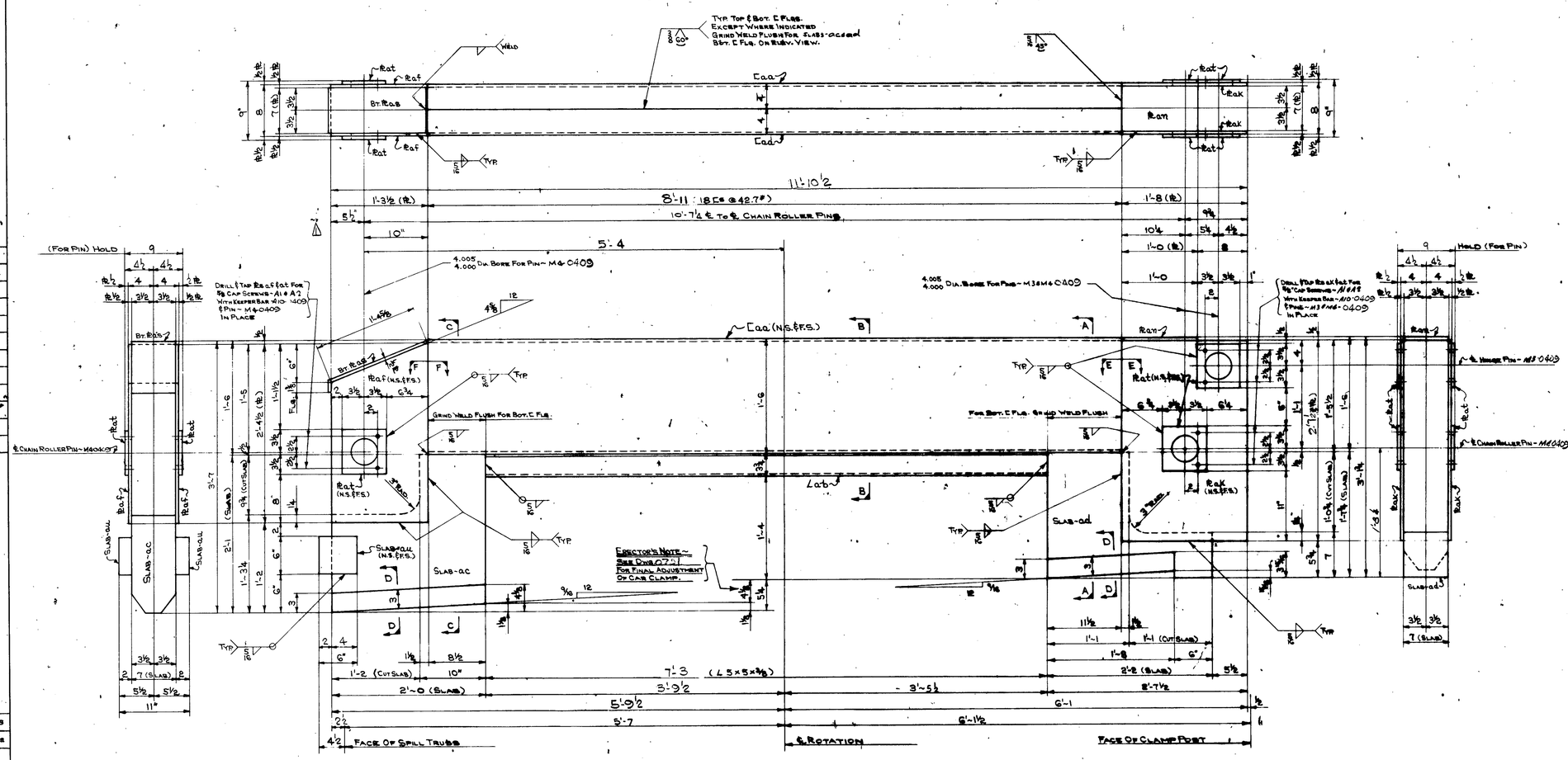

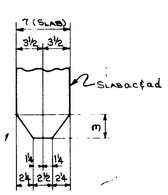

SECTION ~ D-D
(TYPICAL FOR SLABS ac & ad)

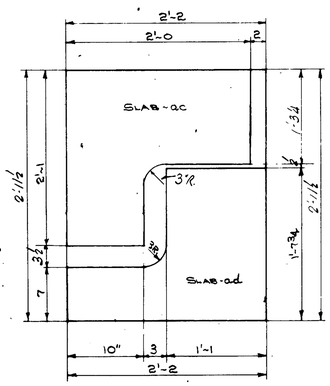

CUTTING SKETCH FOR SLABS ac & ad

2 ~ CAR CLAMP BEAMS ~ 2A

ASSEMBLE IN SHOP WITH ~ HINGE PINS ~ M3-0409 ~ CHAIN ROLLER PINS ~ M6-0409
KEEPER BARS ~ A10-0409

SHOP NOTE ~
WHEN ASSEMBLING PINS KEEP ALL GREASE FITTINGS ON SAME SIDE OF CLAMP BEAMS
ASSEMBLE WITH GREASE FITTINGS ON SIDE AS SHOWN ON DWG. 0701

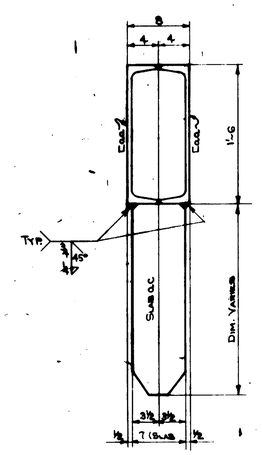

SECTION ~ C-C

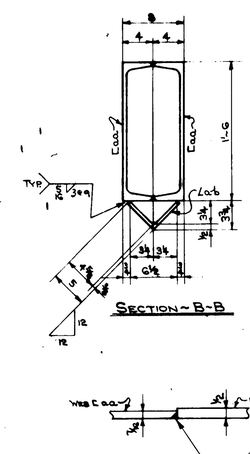

SECTION ~ B-B

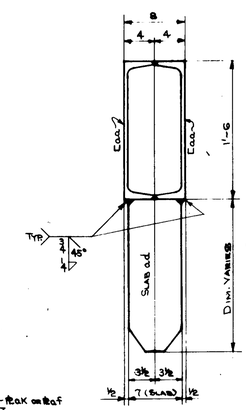

SECTION ~ A-A

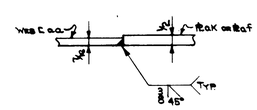

SECTION ~ E-E · SHOWN
SECTION ~ F-F · OPP.

GEN. NOTE ~
ALL HOLES AS NOTED

4848 15B-64

R.J.B. 10-29-71

SHIPPING MARKS			
1A	3A	4A	5A
1B	3B	4B	
2C	3C		
2D			
2F			
2K			
2N			
2S			
2T			
2U			
2X			

ASSEMBLY MARKS				
aa	ba	ca	da	fa
ab	bb	cb	db	
ac	bc	cc		
ad	bd			
af				
ak				
an				
ar				
at				
au				
ax				

BILL OF MATERIAL

LINE	MARK	QTY.	SECTION	LENGTH	WEIGHT	REMARKS	ITEM NO.	PURCH.	ACCT.
1			ALL MAT'L. TO BE ASTM-A36			UNLESS NOTED			
2									
3									
4			2-CAR CLAMP BEAMS ~ 2A						
5			ASSEMBLE IN SHOP WITH THE FOLLOWING MAT'L.						
6			HINGE PINS ~ M3-0409						
7			CHAIN ROLLER PINS ~ M6-0409						
8			KEEPER BARS ~ A10-0409						
9									
10									
11	aa	4	C 18@42.7#	8	11	1556	Connected to be Fabricated Separately	S	
12	ab	2	L 5×5×⅜	7	3	184		S	
13	ac	2	SLAB 24×7	2	1			S	
14	ad	2	SLABS 19¾×7	2	2	3732		S	
15	af	4	PL 15½×½	2	4½	256		24-S	
16	ak	4	PL 20×½	2	7½	368		24-S	
17	an	2	PL 7×½	1	0	24		24-S	
18	as	2	PL 7×½	1	6	36	(BENT)	24-S	
19	at	12	PL 7×½	0	7	120		24-S	
20	au	4	SLAB 6×2	0	6	80	A.R. STL. DSC-1045	S	
21			(6356)						
22	A1	12	⅝" HEX HD. CAP SCREWS	0	1½				
23	A2	12	⅝" STD. LOCK WASHERS						
24									
25									
26									
27									
28									
29									
30									
31									
32									
33									
34									
35									
36									
37									
38									
39									
40									
41									
42									
43									
44									
45									
46									
47									
48									
49									
50									
51									
52									
53									
54									
55									
56									
57									
58									
59									
60									
61									
62									
63									
64									
65									
66									
67									
68									
69									
70									
71									
72									
73									
74									
75									
76									
77									
78									
79									
80									
81									
82									
83									
84									
85									
86									
87									
88									
89									
90									
91									
92									
93									
94									
95			SHOP PAINT						
96			SEE B/M DIV. 87						
97									
98									
99			TOTAL WT.		6356				
100									

REV. #	DATE	NAME	DESCRIPTION
1	9-9-70	TWJ	5 SEWAS 5 / 10" WASIOS

THIS DRAWING IS THE PROPERTY OF HEYL & PATTERSON, INC. AND FURNISHED IN CONFIDENCE FOR TEMPORARY USE AND TO BE RETURNED THEREAFTER IF REQUESTED. NOT TO BE COPIED OR DISCLOSED TO OTHERS WITHOUT THE EXPRESS CONSENT OF HEYL & PATTERSON, INC.

5986-3-0401

HEYL & PATTERSON, INC.
CONTRACTING ENGINEERS
PITTSBURGH, U.S.A.

ROTARY RAILROAD CARDUMPER
DETAILS OF CAR CLAMP BEAMS

FOR BOARD OF WATER & LIGHT
FIRST UNIT DELTA STATION
LANSING, MICHIGAN

DIVISION ESC
MADE S. DOCI
CHECKED
APPROVED

SCALE
DATE 2-13-70
2-19-70
2-19-70

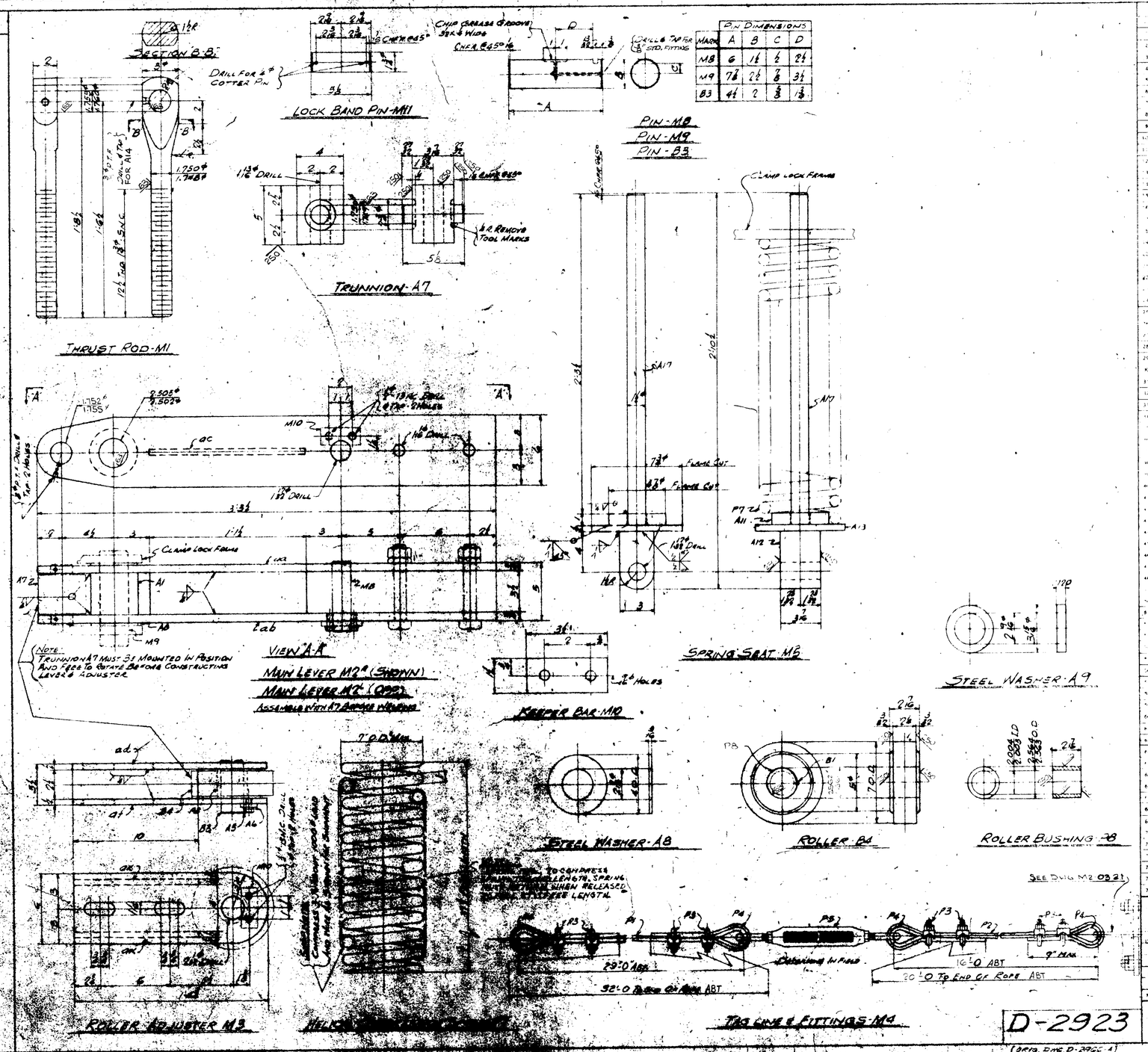

MARK	A	B	C	D
M8	6	1 1/8	1/2	2 1/4
M9	7 1/8	2 1/8	3/8	3 1/4
B3	4 1/4	2	3/8	1 3/8

BILL OF MATERIAL

ITEM	MARK	DESCRIPTION	WEIGHT		
		2 TAGLINES FITTINGS M4			
	P1	2 FLEX HOIST ROPE 1/2" 6x37 WITH HARD FIBER CORE IMPR PLOW STL LENGTH: 32'-0" EACH			
	P2	2 FLEX HOIST ROPE 1/2" 6x37 WITH HARD FIBER CORE IMPR PLOW STL DIM. THIMBLE EYE TO END OF ROPE 20'-0"	10		
	P3	16 1/2" CROSBY CLIPS FOR 1/2" WIRE ROPE	4		
	P4	8 1/2" DRILL HEAVY WIRE ROPE THIMBLES	1		
	P5	2 1/2" EYE & EYE TURNBUCKLES WITH NUTS (STANDARD TAKE-UP)	6		
		THE FOLLOWING MATERIAL TO BE ASSEMBLED IN SHOP AS PER CLAMP LOCK ARRANGEMENT DWG 0104			
		2 MAIN LEVERS M2			
	A1	2 PL SHAFT 4" x 1'-0" x 3'-3 1/2" LG	22		
	A7	2 BARS 5 1/2" x 4" x 0'-5 1/2" C 1046	72	TRUNNION	S
	aa	2 BARS 6" x 3/4" x 3'-3 1/2"	100		S
	ab	2 BARS 6" x 3/4" x 3'-3 1/2"	100		S
	ac	2 BARS 3 1/2" x 1/2" x 1'-1/2"	14		S
		310#			
		2 ROLLER ADJUSTERS M3			
	ad	2 BARS 6" x 1/2" x 1'-4 3/4"	29		S
	af	2 BARS 6" x 1/2" x 1'-4 3/4"	29		S
	ak	4 BARS 2 1/2" x 1/2" x 0'-10"	14		S
	B3	2 PINS 2 1/4" x 0'-4 1/2" LG C.F.S.	5		S
	B4	2 ROLLERS 7" x 2 1/2" C 1045 BRS.	52		S
	B1	2 1/2" x 1" LG HANDLESS SET SCREW BRASS			
	M10	2 BARS 1 1/2" x 1/8" x 1'-7 1/2"		KEEPER BAR	
	M7	2 BUSHINGS 2 1/2" O.D. 2 1/2" O.D. 1/2" I.D. 1/2"		TIE LINKS	
	A3	4 1/2" x 1" LG HEX HD CAP SCREWS			
	A6	4 1/2" SPRING LOCK WASHERS			
		(163#)			
	M1	2 3" ROD x 1'-8 1/2" LG MAS 1040	70	THRUST ROD	
	A14	2 3/8" BUTTON HD GREASE FITTINGS			
	M8	2 PINS 1 1/4" x 0'-6" LG C 1045 C.F.S.	3		
		(8#)			
	M10	2 BARS 1 1/2" x 3/8" x 0'-3 1/2"		KEEPER BAR	S
	M9	4 PINS 2 1/4" x 0'-7 1/8" LG C 1045 C.F.S.	42		
		(42#)			
		2 SPRING SEATS M5			
	A17	2 RODS 1 1/2" x 2'-4 1/2" C 1020 C.F.S.	29		
	A11	2 BARS 4 1/2" x 1"	14		
	A12	2 BARS 4" x 3" x 0'-5 1/2"	37		S
	A13	2 PL 7 3/4" x 1/2"	16		S
		96#			
	A8	4 WASHERS 4" O.D. x 2 1/2" I.D. x 3/16"	4		S
	A9	4 WASHERS 3 1/2" O.D. x 2 1/2" I.D. x .720	6		S
	P7	2 SPRING 7" O.D. x 1/4" WIRE x 37" FREE LGTH	175		
		2 SPRING SAE 5160 ALLOY STL TAPERED & DE ENDS			
		NOTE			
		SPRING MFG. TO COMPRESS SPRING TO SOLID LENGTH.			
		SPRING MUST RETURN WHEN RELEASED TO FULL 37 1/2" FREE LENGTH.			
	M11	2 PINS 1 3/4" x 5 3/8" LG C-1045 CFS	6		
		702			

E986 30401

HEYL & PATTERSON, INC.
CONTRACTING ENGINEERS
PITTSBURGH, PA.

ROTARY RAILROAD CAR DUMPER
CLAMP LOCK MECHANICAL DETAILS

REV.	DATE	NAME	DESCRIPTION

THIS DRAWING IS THE PROPERTY OF HEYL & PATTERSON, INC. AND FURNISHED IN CONFIDENCE FOR TEMPORARY USE AND TO BE RETURNED THEREAFTER IF REQUESTED. NOT TO BE COPIED OR DISCLOSED TO OTHERS WITHOUT THE EXPRESS CONSENT OF HEYL & PATTERSON, INC.

DIVISION: 34 SCALE:
MADE: 3-7-70 DATE: 2-10-70
CHECKED:
APPROVED:

D-2923

(ORIG. DWG D-2966-4)

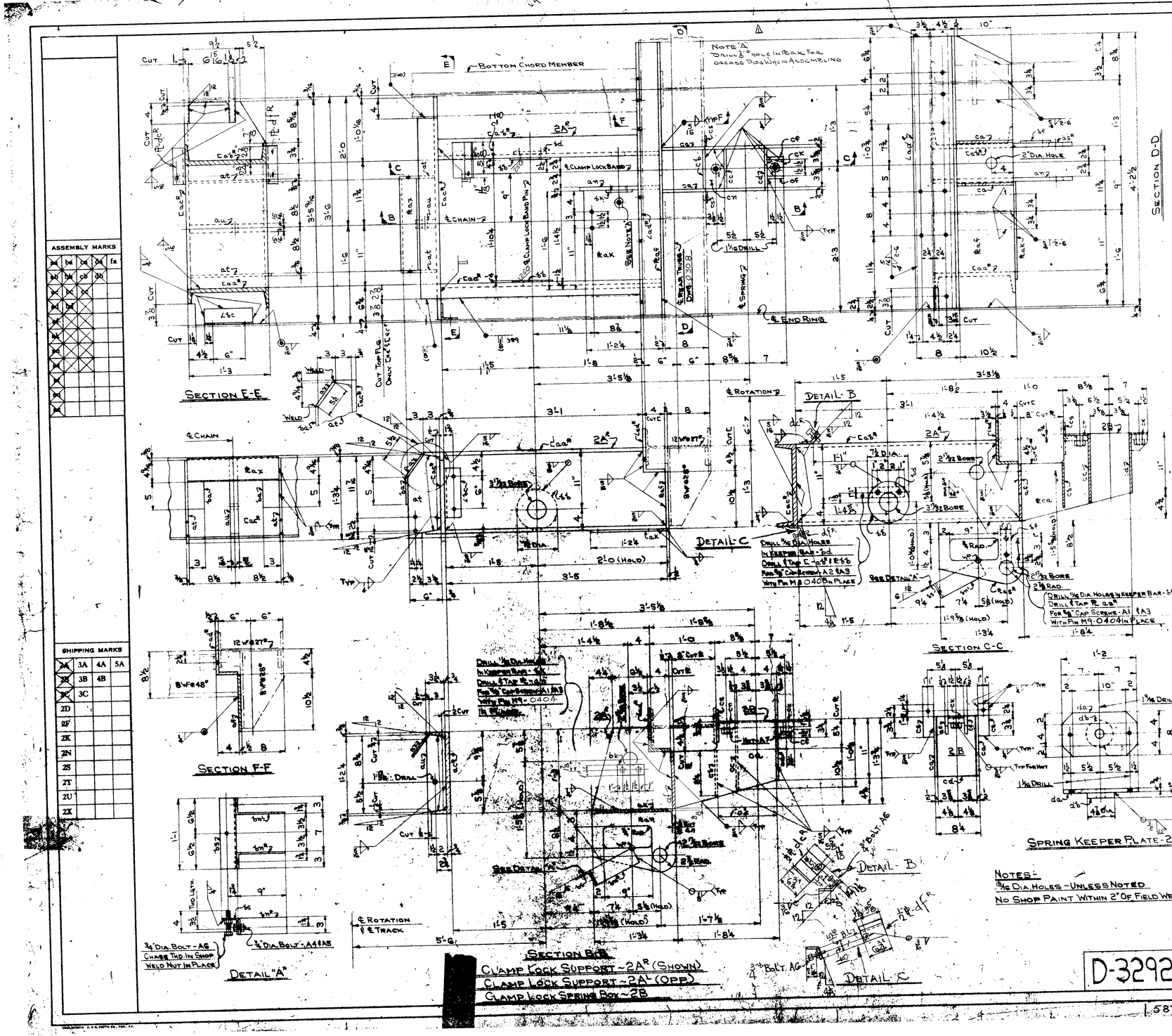

BILL OF MATERIAL

LINE	MARK	NO PCS	SECTION	LENGTH	WEIGHT	REMARKS	ITEM NO
1							
2			ONE - CLAMP LOCK SUPPORT ~ 2A^R				
3			ONE - CLAMP LOCK SUPPORT ~ 2A^L				
4			ASSEMBLE IN SHOP AS PER DWG. - 0106				
5	aa 3/4	2	15 [@ 50	3 5	342		5
6	ab 3/4	2	15 [@ 50	3 5	342		5
7	ac 3/4	2	15 [@ 50	3 5 9/16	346		5
8	ad 3/4	2	∠ 8 × 4 × 1/2	4 2 1/2	165		1
9	af	2	PL 10 1/2 × 1/2	4 2 1/2	153		29-5
10	ak	2	PL 14 1/4 × 3/8	1 6	56		5
11	am	2	PL 15 1/4 × 3/4	2 2 3/4	174		5
12	as 3/4	2	PL 11 3/8 × 3/4	1 3/4	75		5
13	at	4	PL 8 × 3/8	1 3 1/4	39		5
14	au	2	BAR 3 1/2 × 1/2	1 2 4	43	MACHINE 2" R	5
15	az	2	BAR 5 1/2 × 3/8	1 5	20		5
16	ba	4	BAR 3 × 3/8	0 5	6		5
17	bb	4	PL 7 1/2 DIA. × 3/8 THK.		26	CUT FROM 4-3.7 3/4 × 3/8 × 0-7 3/4	5
18	bc	2	∠ 3 × 3 × 5/16	0 9	9		5
19	bd	2	BAR 2 × 1/2	0 6	3	KEEPER BAR	5
20	bf	2	BAR 2 × 3/8	0 5 1/2	2	KEEPER BAR	5
21	bk	2	BAR 2 × 3/8	0 5	2	KEEPER BAR	5
22	bm 3/4	4	BAR 3 × 1/4	0 11 1/2	10	BENT	5
23	bs	2	∠ 3 × 3 × 5/16	1 1	13		5
24	A1	8	3/8 DIA. × 1" LG. HEX HD. CAP SCREWS			FOR bf & bk	
25	A2	4	3/8 DIA. × 1 1/4" LG. HEX HD. CAP SCREWS			FOR bd	
26	A3	12	3/8" SPRING LOCK WASHERS				
27	A4	4	3/4 DIA. × 12" LG. A.S.R. BOLTS			FOR bm 3/4	
28	A5	4	3/4" SPRING LOCK WASHERS				
29	A6	6	3/4 DIA. × 4" LG. A.S.R. BOLTS			FOR SS-WELD NUT SHOP TO CHASE THD. 3/4" DIA.	
30	dc 3/4	2	BAR 4 1/2 × 1/2	0 6 3/4	9	BENT	
31	df 3/4	2	BAR 4 1/2 × 1/2	0 6 3/4	9	BENT	
32			1844				
33							
34							
35							
36							
37							
38							
39							
40			TWO - CLAMP LOCK SPRING BOXES - 2B				
41			ASSEMBLE IN SHOP AS PER DWG. - 0106				
42	ca	4	PL 15 3/4 × 1/2	1 8 3/4	157		29-5
43	cb	2	PL 7 3/4 × 3/8	0 8 3/4	13		5
44	cc	2	PL 7 3/4 × 3/8	1 0 1/2	20		5
45	cd	2	PL 7 3/4 × 3/8	0 11	17		5
46	ce	4	BAR 3 × 1/2	0 3 1/4	6		5
47	ck	2	BAR 3 × 1"	0 3	5		5
48	cm	2	BAR 4 3/8 × 1"	0 7 1/4	18		5
49	cs	4	BAR 2 × 3/8	0 6	5		5
50	A7	4	1" HEX NUTS			WELD IN PLACE	
51			(241)				
52							
53							
54							
55							
56							
57							
58							
59							
60			TWO - SPRING KEEPER PLATES - 2C				
61			ASSEMBLE IN SHOP AS PER DWG. - 0106				
62	da	2	PL 8 × 3/4	1 2	47		3
63	db	2	BAR 4 7/8 DIA. × 1" THK.		16	CUT FROM 2-BAR 5 1/4 × 1'-0" × 5 1/4	3
			(63)				
64							
65							
66							
67							
68							
69			PAINT 5/M DIV 87				
70							
71							
72							
73							
74							
75				214			

REV	DATE	NAME	DESCRIPTION
1	7-16-70	H.S.	PRC. KRTY OF HEYL & PATTERSON, INC.

THIS DRAWING IS AND FURNISHED IN CONFIDENCE FOR TEMPORARY USE AND TO BE RETURNED THEREAFTER IF REQUESTED. NOT TO BE COPIED OR DISCLOSED TO OTHERS WITHOUT THE EXPRESS CONSENT OF HEYL & PATTERSON, INC.

DIVISION 08 | SCALE | MADE G. DOLFI | DATE 2-16-70 | CHECKED T. WEIDNER | DATE 4-6-70 | APPROVED | DATE

NOTE:

OUTER SURFACE OF BAND TO BE BURNED TO 31 7/8 O.D.
ANY SURFACE INDENTATIONS 1/8 DEEP OR LESS TO BE GROUND SMOOTH. SURFACE INDENTATIONS MORE THAN 1/8 DEEP ARE TO BE WELDED & GROUND SMOOTH.

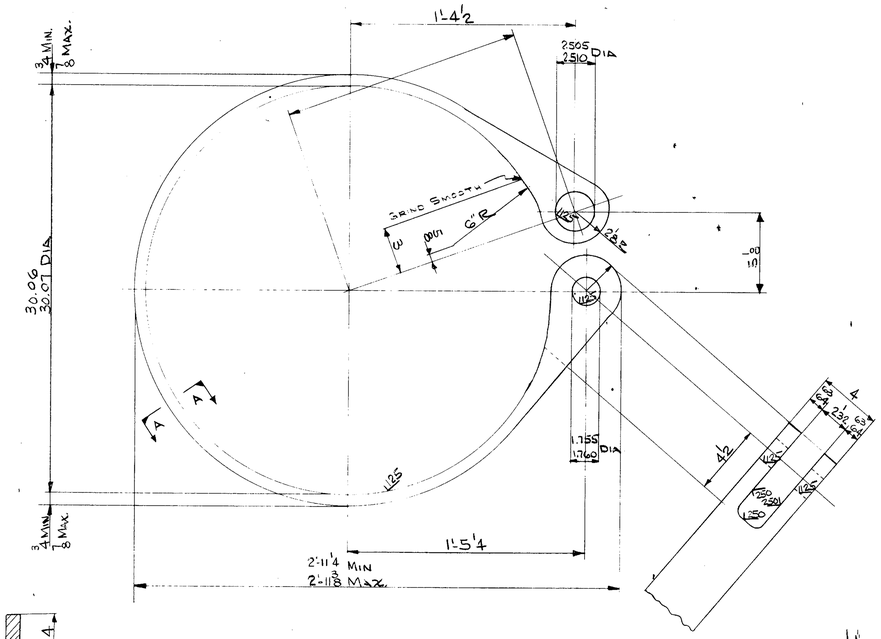

SECTION ~ AA

LOCK DRUM BAND ~ M1

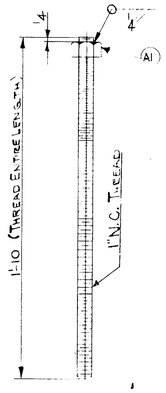

SPRING ADJUSTING BOLTS ~ M4
1" DIA. ~ C-1045 ~ C.F. STEEL

SHIPPING MARKS			
2A	3A	4A	5A
2B	3B	4B	
2C	3C		
2D			
2F			
2K			
2N			
2S			
2T			
2U			
2X			

ASSEMBLY MARKS				
aa	ba	ea	da	fa
ab	bb	eb	db	
ac	bc	ec		
ad	bd			
af				
ak				
an				
as				
at				
au				
ax				

BILL OF MATERIAL

LINE	MARK	NO. PCS.	SECTION	LENGTH	WEIGHT	REMARKS	ITEM NO.	PURCH.	ACCT'G
3			ASSEMBLE THE FOLLOWING IN						
4			SHOP AS PER DWG. 0106						
6	M1	2	SLAB 33x4	3 0 1/2	200		5		
7			USE MATERIAL REMAINING						
8			TO MAKE HEATER HOOK. REF. (2785)						
11	M4	4	SPRING ADJ. BOLTS ROD 1" x 1'-10 LG. C.F.S. C.F.S. 20# THD ENT LETH.						
12	A1	4	1" HEX NUTS						
76			PAINT SEE B/M 3701						

REV. #	DATE	NAME	DESCRIPTION

THIS DRAWING IS THE PROPERTY OF HEYL & PATTERSON, INC., AND FURNISHED IN CONFIDENCE FOR TEMPORARY USE AND TO BE RETURNED THEREAFTER IF REQUESTED. NOT TO BE COPIED OR DISCLOSED TO OTHERS WITHOUT THE EXPRESS CONSENT OF HEYL & PATTERSON, INC.

4648 15B-69

J.A.B. 10-29-71

5986-3-0407

HEYL & PATTERSON, INC.
CONTRACTING ENGINEERS
PITTSBURGH, U.S.A.

ROTARY RAILROAD CAR DUMPER
DET. BRAKE BAND ADJ. BOLT

FOR FIRST UNIT - DE-IN STATION
PLANT OF WATER AND LIGHT
LANDING, MICH.

DIVISION — SCALE
MADE G. DOLFI — DATE 1-5-70
CHECKED T. WEIDNER — " 1-12-70
APPROVED WEP — " 4-1-70

DIETZGEN-PITTSBURGH

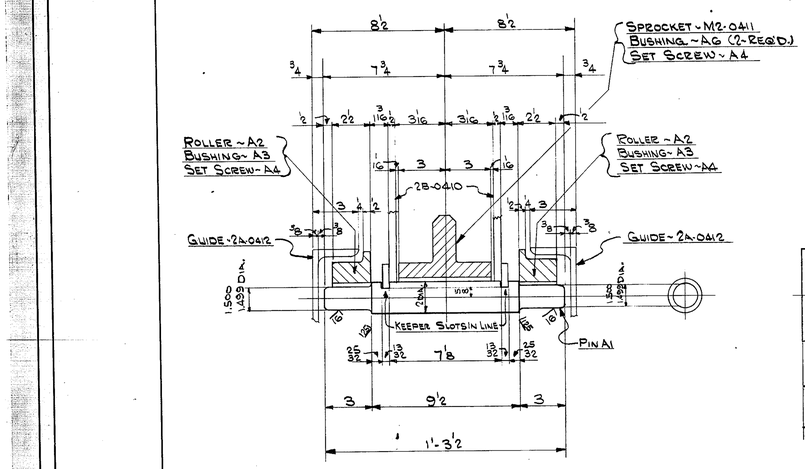

SHUTTLE PIN ASSEMBLY ~ M1

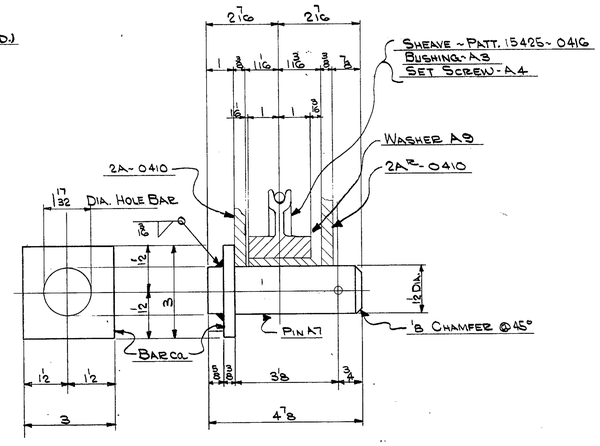

SHEAVE PIN ASSEMBLY ~ M2

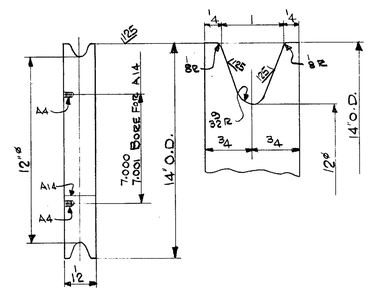

SHEAVE ~ A11

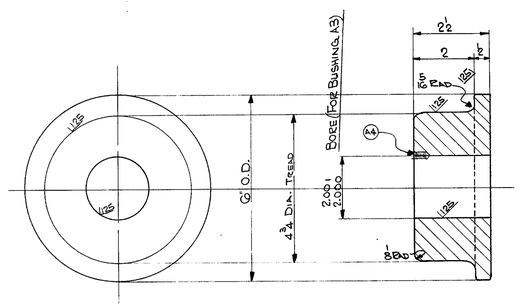

ROLLER ~ A2

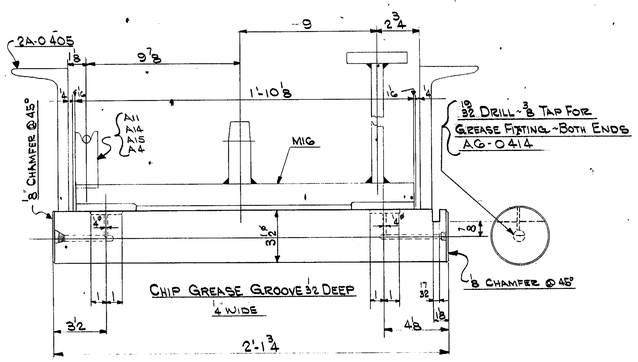

SPROCKET ~ BRAKE WHEEL PIN ~ M3

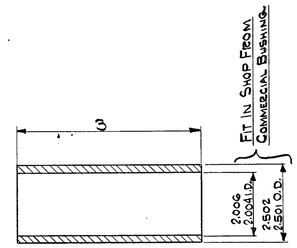

BUSHING ~ A6

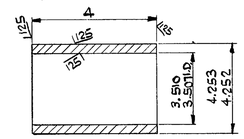

BUSHING ~ A13

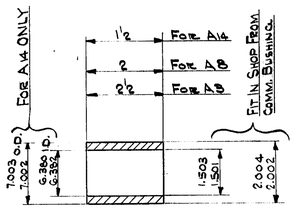

BUSHING ~ A3
BUSHING ~ A8
BUSHING ~ A14

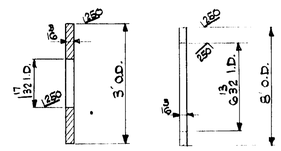

WASHER ~ A9 WASHER ~ A15

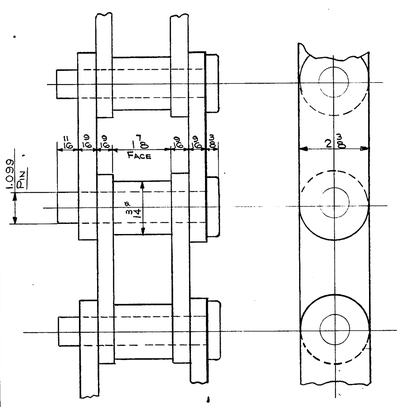

ROLLER CHAIN ~ M14

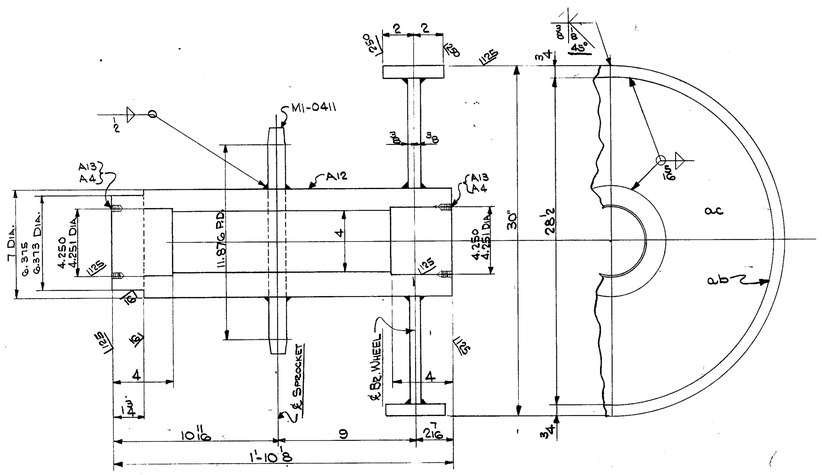

SPROCKET ~ BRAKE WHEEL UNIT ~ M16

BILL OF MATERIAL

LINE	MARK	NO. PCS	DESCRIPTION	WEIGHT	REQ'D. IN SHOP			
1								
2			2~ SHUTTLE PIN ASSEMBLIES ~ M1					
3			ASSEMBLE IN SHOP WITH SHUTTLE YOKE 2B-0410					
4	A1	2	PINS ~ 2" DIA. x 1'-3½ LG. ~ T&P STL.	23	YES	C-1045		
5			TURN BOTH ENDS ~ SLOT FOR 2 KEEPER					
6			BARS. (ROUGH WT. ~ 14# EACH)					
7	A2	4	SINGLE FLG. ROLLERS ~ 4¾ TREAD DIA.	47	YES			
8			6" O.D. FLANGE ~ TURN FROM ~ C-1045					
9			4~ SLABS 6½ x 2½ x 0'-6½ (125#)					
10	A3	4	OIL IMPREGNATED BRZ. BUSH. 2½ LG.	4	YES			
11			1.501 ~ 1.503 I.D. 2.002 ~ 2.004 O.D.					
12	A4	4	5/16" x ½ LG HEADLESS SET SCREWS				BRASS	
13								
14								
15								
16	A6	4	OIL IMPREGNATED BRZ. BUSHING	7	YES			
17			3" LG. 2.006 ~ 2.004 I.D. 2.501 ~ 2.502 O.D.					
18	A4	8	SET SCREWS					
19								
20								
21			2~ SHEAVE PIN ASSEMBLIES ~ M2					
22			ASSEMBLE IN SHOP WITH SUPPORT 2A-0410					
23	A7	2	PINS ~ 1½" x 4⅜ LG. ~ C-1045 T&P STL.	5				
24	a2	2	BARS 3" x ⅜ x 0'-3 (WELD TO A7) (2)				3	
25	PATT. 15425	REF.	2~ 12" SHEAVES FOR ½ ROPE	50	YES			
26			DWG. 0416 BORE 2.000 ~ 2.001 ~					
27			HUB 3" DIA. 2" LG. THRU BORE					
28			40 TO 50 CARBON CAST STEEL					
29								
30	A8	2	OIL IMPREGNATED BRZ BUSHING 2" LG	2	YES			
31			1.501 ~ 1.503 I.D. ~ 2.002 ~ 2.004 O.D.					
32	A4	2	SET SCREWS					
33	A9	2	WASHERS 8" O.D. x 13/32 I.D. x 3/16 TK. HALF	1	YES			
34			HARD BRASS					
35	M13	2	SPROCKET BRAKE WHEEL PINS 3½"	140				
36			x 2'-¾ LG. C-1045 T&P STL. ASSEMBLE					
37			IN SHOP WITH M16 AS PER DWG 0106					
38			2~ SPROCKET BRAKE WHEEL UNITS M16					
39			ASSEMBLE IN SHOP WITH M13 AS PER DWG. 0106					
40	A12	2	PCS 7" O.D. x 4" I.D. SEAM STL. TUBING	157#	YES			
41			1'-10⅛ FIN. LG. CTR. WT (16.2# EACH)					
42								
43								
44	a6	2	PCS 4½ x 1 x 8'-1 (4⅜ ADDED) (231#)	157	YES	BENT	3	
45	a2	2	PCS 28½ O.D. 7.61 I.D. ¾ THK. CUT FROM	260			5	
46			2 PCS 29 x ¾ x 2'-5 (368#)		YES			
47	A13	4	BUSHINGS ~ SAE 67 BRZ.	16				
48			4.252 ~ 4.253 O.D. ~ 3.507 ~ 3.510		YES			
49			I.D. x 4" LG.					
50	A4	8	SET SCREWS					
51	A11	2	12" SHEAVES ~ C-1045 STL. MAKE FROM	82			3	
52			2 PCS 14½ x 1½ x 1'-2½ (180#)					
53	A14	2	LUBRITE ~ SELFLUBE BRONZE BUSH	6	YES			
54			7.003 ~ 7.002 O.D. ~ 6.380 ~ 6.382 I.D.					
55			1½ LG.					
56	A4	4	SET SCREWS					
57	A15	2	WASHERS 3/16 HALF HARD BRASS	2	YES			
58			8" O.D. x 6 13/32 I.D.					
59								
60								
61			2~ ROLLER CHAINS ~ M14					
62		2	STRANDS OF UNION HB SPECIAL		NO			
63			DRIVE CHAIN EA. 60'-0 LG.					
64			WITH THE FOLLOWING SPECS (FOR					
65			CLAMP)					
66								
67			①~ STRAIGHT SIDE BARS					
68			2⅜ W x 3/16 THK.					
69			②~ PITCH EQUAL 4.063					
70			③~ PIN DIA. EQUAL 1.099	2400				
71			④~ ROLLERS 1 3/4" x 1⅞ LG.					
72			⑤~ NO BUSHINGS REQ'D.					
73			⑥~ ULT. STRG. 220,000#					
74								
75								
76								
77								
78								
79								
80								
81								
82								
83								
84								
85								
86								
87								
88								
89								
90								
91								
92								
93								
94								
95								
96								
97								
98								
99			TOTAL WT	880				
100								

REV. #	DATE	NAME	DESCRIPTION

THIS DRAWING IS THE PROPERTY OF HEYL & PATTERSON, INC. AND FURNISHED IN CONFIDENCE FOR TEMPORARY USE AND TO BE RETURNED THEREAFTER IF REQUESTED. NOT TO BE COPIED OR DISCLOSED TO OTHERS WITHOUT THE EXPRESS CONSENT OF HEYL & PATTERSON, INC.

5986-3-0408

HEYL & PATTERSON, INC.
CONTRACTING ENGINEERS
PITTSBURGH, U.S.A.

ROTARY RAILROAD CAR DUMPER
DETAILS OF PINS ~ BUSHINGS, ROLLERS
SPROCKET & BRAKE WHEEL UNIT
FOR ROLLS OF LUBRITE & LIGHT
INSPECTION UNIT ~ DELTA STATION
LANSING, MICHIGAN

DIVISION S.A.
MADE S. DOLFI
CHECKED J.P. FAUSTA
APPROVED W.G.

SCALE
DATE 2-5-70
2-10-70
2-23-70

J.A.B. 10-29-71

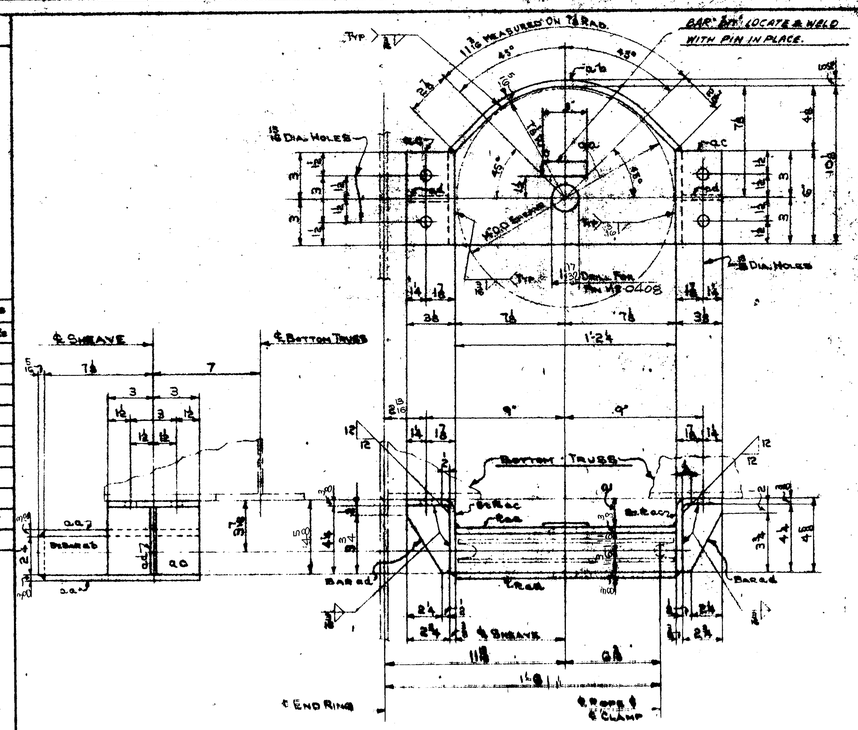

2- SHEAVE SUPPORT ~ 2A

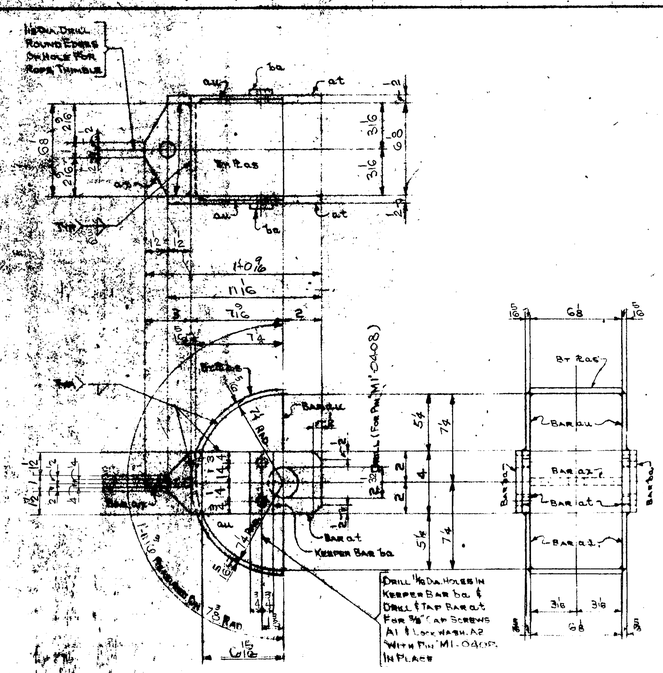

SHUTTLE YOKE ~ 2B

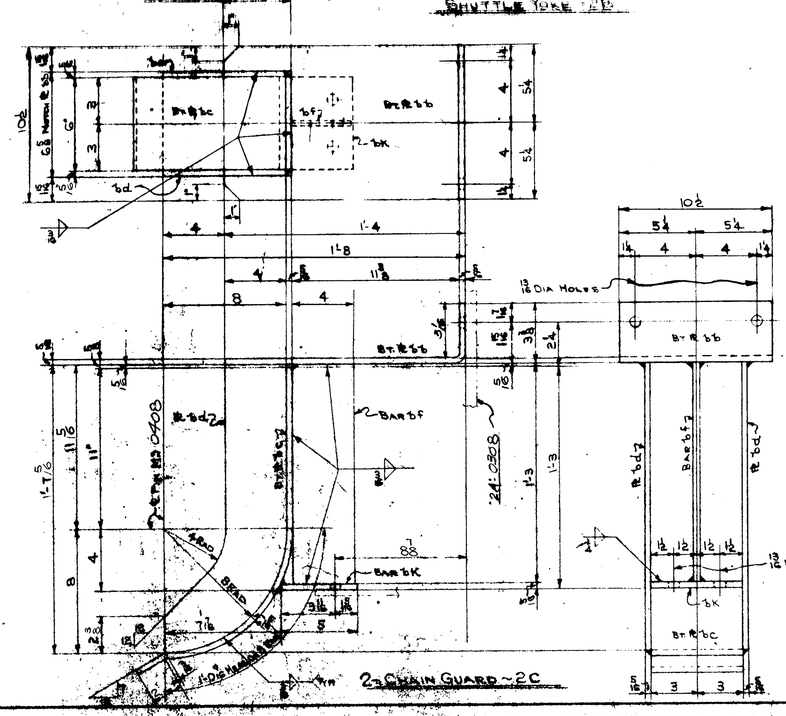

2- CHAIN GUARD ~ 2C

ASSEMBLY MARKS				
~~aa~~	~~ab~~	~~ac~~	~~ad~~	~~ba~~
~~ab~~	~~bb~~	~~cb~~	~~db~~	
~~ac~~	~~bc~~	~~cc~~		
~~ad~~	~~bd~~			
~~ba~~	~~bf~~			
~~bb~~	~~bK~~			
~~bc~~				
~~bd~~				
~~bf~~				
~~bK~~				

SHIPPING MARKS			
~~2A~~	3A	4A	5A
~~2B~~	3B	4B	
~~2C~~	3C		
2D			
~~2M~~			
~~2K~~			
~~2N~~			
~~2S~~			
~~2T~~			
~~2U~~			
~~2X~~			

BILL OF MATERIAL

LINE	MARK	NO. PCS.	SECTION	LENGTH	WEIGHT	REMARKS	ITEM NO.
1							
2							
3			2 ~ SHEAVE SUPPORTS ~ 2A				
4			ASSEMBLE IN SHOP WITH PIN MI-0408				
5	aa	4	PL 10 1/4 x 3/8	1 2 1/4	64		S
6	ab	2	BAR 2 3/8 x 7/16	1 5 1/4	7	BENT	S
7	ac	4	BAR 6 x 3/8	0 7	18	BENT	S
8	ad	4	BAR 2 1/2 x 3/8	0 4 1/2	6		S
9	bh	2	BAR 1 x 3/8	0 3	1		S
10			(98)				
11							
12							
13							
14							
15							
16			2 ~ SHUTTLE YOKES ~ 2B				
17			ASSEMBLE IN SHOP WITH PIN MI-0408				
18	as	2	PL 6 1/8 x 5/16	1 11 3/8	26	BENT	S
19	at	4	BAR 4 x 1/2	0 11/16	22		S
20	au	8	BAR 5 1/4 x 5/16	0 6 5/8	12		S
21	ax	2	BAR 3 x 1/2	0 8 1/2	5		S
22	ba	4	BAR 1 1/2 x 1/2	0 4	3	KEEPER BAR	S
23	A1	8	3/8 DIA. x 1 LG. HEX. HD. CAP SCREWS				
24	A2	8	3/8 STD. LOCK WASHERS				
25			(66)				
26							
27							
28							
29							
30			2 ~ CHAIN GUARDS ~ 2C				
31			ASSEMBLE IN SHOP AS PER DWG. 0106				
32	bb	2	PL 10 1/2 x 5/16	1 6 3/4	55	BENT	S
33	bc	2	PL 6 x 5/16	2 2 1/16	29	BENT	S
34	bd	4	PL 8 x 5/16	1 1 7/16	21	BENT	S
35	bf	2	BAR 4 x 5/16	1 3	11		S
36	bK	2	BAR 5 x 5/16	0 6	5		S
37			(121)				
38							
39							
40							
41							
42							
43							
44							
45							
46							
47							
48					283		
49							
50							

REV. #	DATE	MADE	DESCRIPTION

NOTE:
HOLES AS NOTED

D-3295

THIS DRAWING IS THE PROPERTY OF HEYL & PATTERSON, INC., AND FURNISHED IN CONFIDENCE FOR TEMPORARY USE AND TO BE RETURNED THEREAFTER IF REQUESTED. NOT TO BE COPIED OR DISCLOSED TO OTHERS WITHOUT THE EXPRESS CONSENT OF HEYL & PATTERSON, INC.

SCALE 3 INCHES TO ONE FOOT

5986-3-0410

HEYL & PATTERSON, INC.
CONTRACTING ENGINEERS
PITTSBURGH, U.S.A.

ROTARY RAILROAD CAR DUMPER
DETAILS OF SHEAVE SUPPORT
SHUTTLE YOKE ~ CHAIN GUARD

FOR BOARD OF WATER & LIGHT
FIRST UNIT DELTA STATION
LANSING, MICHIGAN

CONTROL OFFICE — DATE
MADE G. DOLFI — DATE 2-18-70
TRACED — DATE
CHECKED T. WEIDNER — DATE 4-6-70
APPROVED W.P. — DATE 4-13-70

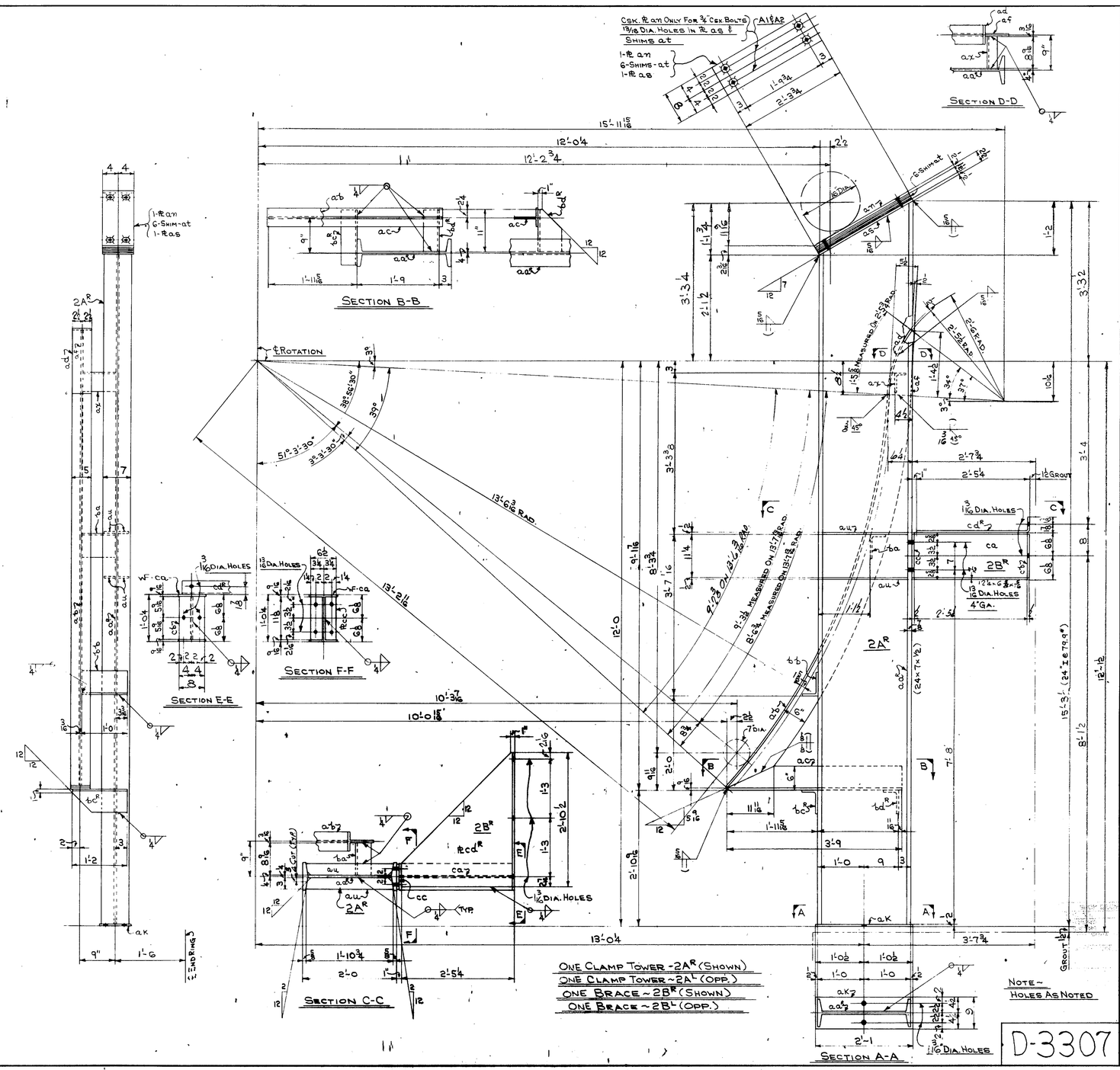

ASSEMBLY MARKS				
aa	ba	ca	da	fa
ab	bb	cb	db	
ac	bc	cc		
ad	bd			
af				
ak				
an				
as				
at				
au				
ax				

SHIPPING MARKS			
2A	3A	4A	5A
2B	3B	4B	
2C	3C		
2D			
2F			
2K			
2N			
2S			
2T			
2U			
2X			

BILL OF MATERIAL

LINE	MARK	NO. PCS.	SECTION	LENGTH	WEIGHT	REMARKS	ITEM NO.
1							
2			ONE ~ CLAMP TOWER ~ 2A^R				
3			ONE ~ CLAMP TOWER ~ 2A^L				
4	aa PL	2	24 I @ 79.9	15 3	2464		S
5	ab	2	ST G I @ 15.9	10 3/4	328	BENT ROLLED TO 20R BENDING	S
6	ac	2	ST G I @ 15.9	3 9	120		S
7	ad	2	BAR 5 × 1/2	1 5 5/8	25	BENT	S
8	af	2	BAR 5 1/2 × 3/8	1 4 1/2	19		S
9	ak	2	PL 9 × 1/2	2 1	65		29-S
10	an	2	PL 8 × 1/2	2 3 3/4	64		29-S
11	as	2	PL 8 × 1/2	2 3 3/4	64		29-S
12	at	12	SHIM 8 × 1/4	2 3 3/4	192		S
13	au	8	BAR 3 × 1/2	1 10 3/4	36		S
14	ax	2	L 5 × 3 × 3/8	0 8 9/16	15		S
15	ba	2	L 6 × 4 × 3/8	0 8 9/16	18		S
16	bb	2	L 6 × 4 × 3/8	1 0	25		S
17	bc PL	2	L 6 × 4 × 3/8	1 2	28		S
18	bd PL	2	L 6 × 4 × 3/8	0 11	23		S
19	A1	8	3/4 DIA. CSK. HD BOLTS	0 3 1/2			
20	A2	8	3/4 SP LOCKWASHERS				
21			(3486)				
22							
23							
24							
25							
26							
27							
28							
29							
30			ONE ~ BRACE ~ 2B^R				
31			ONE ~ BRACE ~ 2B^L				
32	ca	2	12 WF ~ 36	2 5 1/4	178		S
33	cb	2	PL 8 × 1/2	0 11 1/8	26		29-S
34	cc	2	PL 6 1/2 × 1/2	0 11 1/8	20		29-S
35	cd PL	2	PL 2 1/4 × 3/8	2 10 1/2	148	BENT, CUT 2 FROM 1-PL 3 1/4 × 3/8 × 3'-7 3/4	S
36			(372)				
37							
38							
39							
40							
41							
42							
43							
44							
45							
46							
47							
48							
49							
50							
51							
52							
53							
54							
55							
56							
57							
58							
59							
60			SHOP PAINT				
61			SEE B1M870				
62							
63						4848	158-75
64							
65							
66						9-7-18	
67						10-29-71	
68							
69							
70							
71							
72							
73							
74							
75					6850		

REV. #	DATE	NAME	DESCRIPTION

THIS DRAWING IS THE PROPERTY OF HEYL & PATTERSON, INC., AND FURNISHED IN CONFIDENCE FOR TEMPORARY USE AND TO BE RETURNED THEREAFTER IF REQUESTED. NOT TO BE COPIED OR DISCLOSED TO OTHERS WITHOUT THE EXPRESS CONSENT OF HEYL & PATTERSON, INC.

D-3307

5986-3-0413

HEYL & PATTERSON, INC.
CONTRACTING ENGINEERS
PITTSBURGH, U. S. A.

ROTARY RAILROAD CAR DUMPER
DETAILS OF CLAMP TOWER & BRACE

FOR BOARD OF WATER & LIGHT
FIRST UNIT ESTIMATION
LANSING, MICHIGAN

DIVISION
MADE G.J.D.D.L.F.I. DATE 2-15-70
CHECKED T.J.A. 10-4-69 DATE 4-6-70
APPROVED W.T.S. DATE 4-13-70
SCALE 1/16"

PR 8478

TITLE

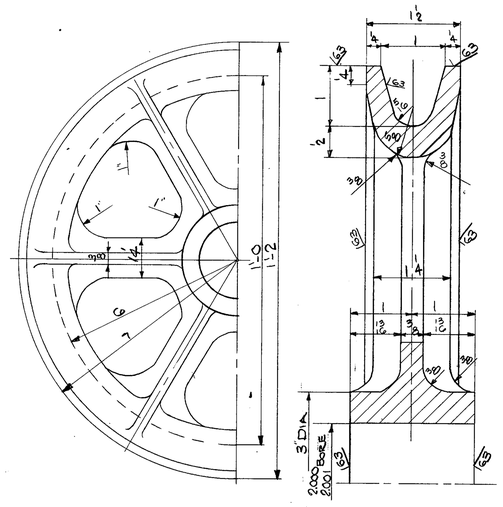

12" DIA. SHEAVE PAT. 15425 ALT.

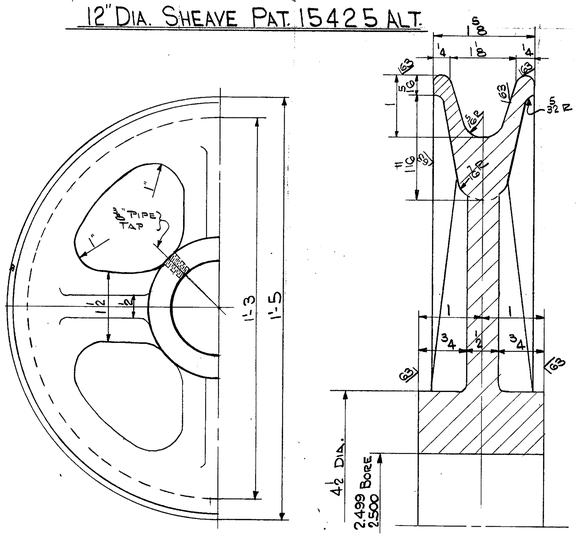

15" DIA. SHEAVE PAT. 8826

BILL OF MATERIAL

LINE	MARK	NO. PCS.	DESCRIPTION	WEIGHT	REQ'D. IN SHOP			
1								
2								
3								
4								
5								
6	PAT. 15425 ALT.	4	12" DIA. SHEAVES FOR ½" ROPE BORE	110				
7			2.000-2.001-HUB 3" DIA.-2 LG. THRU					
8			BORE, 40 TO 50 CARBON CAST STL.					
9			ASSEMBLE IN SHOP WITH 2A-0410					
10			(ORIGINAL PAT. ON DWG. L-724					
11								
12								
13	PAT. 8826	4	15" DIA. SHEAVES FOR ½" ROPE-CAST IRON	220				
14			BORE 2.499-2.500-HUB 4½ DIA.-2 LG.					
15			THRU BORE.					
16			ASSEMBLE IN SHOP WITH 2A-0403					
17			(ORIGINAL PAT. ON DWG. L-162)					
18								
19								
20								
21								
22								
23								
24								
25								
26								
27								
28								
29								
30								
31								
32								
33								
34								
35								
36								
37								
38								
39								
40								
41								
42								
43								
44								
45								
46								
47								
48								
49								
50								
51								
52								
53								
54								
55								
56								
57								
58								
59								
60								
61								
62								
63								
64								
65								
66								
67								
68								
69								
70								
71								
72								
73								
74								
75								
76								
77								
78								
79								
80								
81								
82								
83								
84								
85								
86								
87								
88								
89								
90								
91								
92								
93								
94								
95								
96								
97								
98								
99			TOTAL WT.	330				
100								

REV. #	DATE	NAME	DESCRIPTION

THIS DRAWING IS THE PROPERTY OF HEYL & PATTERSON, INC., AND FURNISHED IN CONFIDENCE FOR TEMPORARY USE AND TO BE RETURNED THEREAFTER IF REQUESTED. NOT TO BE COPIED OR DISCLOSED TO OTHERS WITHOUT THE EXPRESS CONSENT OF HEYL & PATTERSON, INC.

4848 15-8-96

J.A.B. 10-29-91

5986-3-0416

HEYL & PATTERSON, INC.
CONTRACTING ENGINEERS
PITTSBURGH, U. S. A.

UNIT TRAIN TYPE ROTARY DUMPER
DETAIL OF SHEAVES

FOR BOARD OF WATER AND WORKS
FIRST UNIT - DELTA STATION
LANSING, MICHIGAN

DIVISION 04
MADE G. DOLFI
CHECKED T. WEITNER
APPROVED
SCALE
DATE

LIST OF A.S.B. FIELD BOLTS

LINE	DRAWING NUMBER	NUM. REQ'D.	CONNECT MK. NO. TO MK. NO.	ϕ	GRIP	WASHER TYPE	WASHER THICKNESS (SEE H&P STD)	ADD FOR TABLE 5 AISC SPEC 5-177	LENGTH UNDER HEAD TO NEXT 1/4"	REMARKS	
1	0410	8	2A TO BOTT. TRUSS	3/4	3/4	STD LOCK			1 3/4		
2											
3	0412	8	2C TO END RING	3/4		STD LOCK			1 3/4		
4		8	" "	3/4		STD BEVEL			2 1/2		
5											
6	0413	8	2A TO CC	3/4	1 1/8	STD BEVEL			3		
7											
8											
9											
10											
11											
12											
13											
14											
15											
16											
17											
18											
19											
20											
21											
22											
23											
24											
25											
26											
27											
28											
29											
30											
31											
32											
33											
34											
35											
36											
37											
38											
39											
40											
41											
42										4848 158-86	
43											
44											
45											
46											
47											
48											
49											
50											

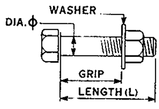

WASHER TYPE

- A325 FLAT
- a A325 BEVEL 5/8 IN 12 (5%)
- b A325 BEVEL STD. 2 IN 12 (16.2/3%)
- □ CLIPPED

BOLT SUMMARY / WITH HEAVY NUTS

LINE	ϕ	L	TOTAL REQ'D. +2%	REMARKS
1	3/4	1 3/4	18	
2	3/4	2 1/2	10	
3	3/4	3	10	
4				
5				
6				
7				
8				
9				
10				
11				
12				
13				
14			SUMMARY	
15				

WASHER SUMMARY

ϕ	TYPE —	TYPE a	TYPE b	TYPE □	TOTAL REQ'D. +2%	REMARKS
3/4					18	STD FLAT
3/4					20	STD BEVEL

EXTRA NUTS

P.O. #

REV. #	DATE	NAME	DESCRIPTION

5986-3-0419

HEYL & PATTERSON, INC.
CONTRACTING ENGINEERS
PITTSBURGH, U.S.A.

B/M FIELD BOLTS

FOR BOARD OF WATER / LIGHT
FIRST UNIT - DELTA STATION
LANSING, MICHIGAN

CONTRACT DIV. 04 PRO. NO.
MADE G. DOLFI DATE 4-9-70
TRACED "
CHECKED T. WEIDNER " 4-17-70
APPROVED WJJ " 4-20-70

DIETZGEN—PITTSBURGH

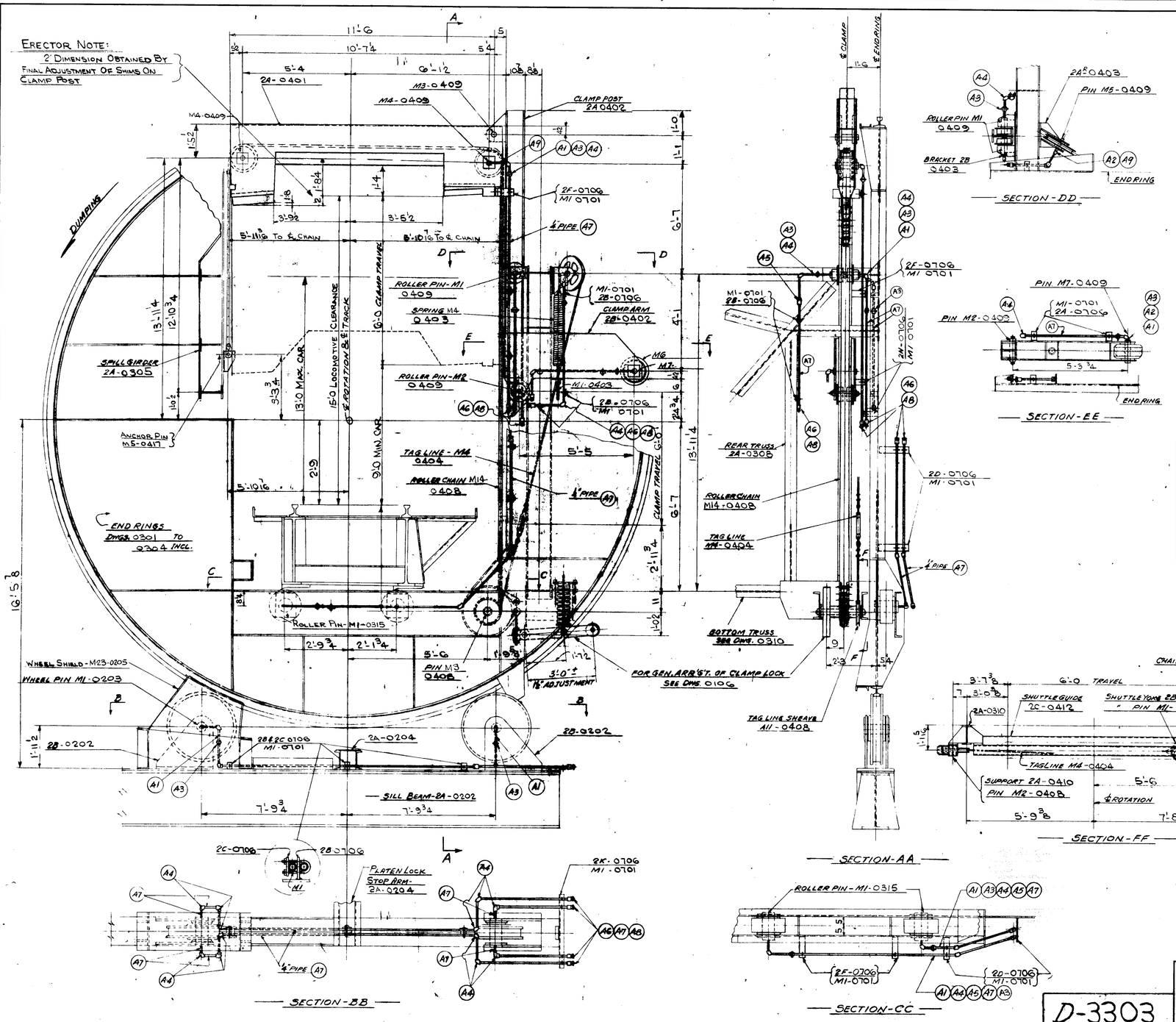

BILL OF MATERIAL

LINE	MARK	AMT.	DESCRIPTION	WT.	REQ'D IN SHOP
1			GREASE PIPE, ETC. FOR ROTARY STRUCTURE		
2	A1	10	¼" x 3" LG. PIPE NIPPLES STD. BLACK		NO
3	A2	4	¼"-90° STREET ELBOWS STD. BLACK		NO
4	A3	14	¼" UNIONS STD. BLACK		NO
5	A4	16	¼"-90° ELBOWS STD. BLACK		NO
6	A5	10	¼"-45° ELBOWS STD. BLACK		NO
7	A6	14	¼" PIPE COUPLINGS STD. BLACK		NO
8	A7	150	LIN. FT. ¼" PIPE STD. BLACK		NO
9			NOTE:-		
10			ABOVE PIPE & FITTINGS TO BE		
11			PICKLED & OILED. ENDS PROTECTED (CAPPED) BEFORE		
12			SHIPMENT TO FIELD.		
13	A8	14	¼" BUTTON HD. GREASE FITTINGS		NO
14	A9	4	¼" I.D. x 1'-6" Lg. WIRE BRAID RUBBER		
15			COVERED HOSES - 2500 PSI. MWP.		
16			WITH ONE MALE UNION COUPLING FOR		
17			¼" I.P.S. & ONE FEMALE UNION		
18			COUPLING FOR ¼" I.P.S.		
19					
20					
21					
22			GREASE PIPE, ETC. FOR SILL BEAMS		
23	A1	8	¼" x 3" LG. PIPE NIPPLES STD. BLACK		NO
24	A4	32	¼"-90° ELBOWS STD. BLACK		NO
25	A3	8	¼" UNIONS STD. BLACK		NO
26	A6	8	¼" PIPE COUPLINGS STD. BLACK		NO
27	A7	100	LIN. FT. ¼" PIPE STD. BLACK		NO
28			NOTE:-		
29			ABOVE PIPE & FITTINGS TO BE		
30			PICKLED & OILED. ENDS PROTECTED (CAPPED) BEFORE		
31			SHIPMENT TO FIELD.		
32	A8	8	¼" BUTTON HD. GREASE FITTINGS		NO
33					
34	M1	52	STD. "U" BOLTS FOR 3" PIPE WITH NUTS		NO
35			BLAW-KNOX CAT. 54 PG. 47 (OR EQUAL)		
36					
37					
38					
39					
40					
41					
42					
43					
44					
45					
46					
47					
48					
49					
50					

REV. #	DATE	NAME	DESCRIPTION

SCALE ¼ INCHES TO ONE FOOT

5986-3-0701

HEYL & PATTERSON, INC.
CONTRACTING ENGINEERS
PITTSBURGH, U. S. A.

GEN. ARR'GT. OF CAR CLAMP & LUBRICATION SYSTEM.
FOR BOARD OF WATER & LIGHT
FIRST UNIT - DELTA STATION
LANSING, MICHIGAN
CONTRACT DIV. 07 PRO. NO.
MADE G. DOLEI DATE 1-8-70
TRACED "
CHECKED J. WEIDNER " 1-27-70
APPROVED W.J. " 2/6/70
MACHINERY BILLS No.

THIS DRAWING IS THE PROPERTY OF HEYL & PATTERSON, INC., AND FURNISHED IN CONFIDENCE FOR TEMPORARY USE AND TO BE RETURNED THEREAFTER IF REQUESTED. NOT TO BE COPIED OR DISCLOSED TO OTHERS WITHOUT THE EXPRESS CONSENT OF HEYL & PATTERSON, INC.

D-3303

NO. 5003 SMITH A. & R. KNOX CO., PGH., PA. PR 5979-362

BILL OF MATERIAL

LINE	MARK	NO. PCS.	DESCRIPTION	REQ. IN SHOP	PURCHASING	ACCT'G.
1			ELECTRICAL EQUIPMENT FOR ROTARY RR CAR DUMPER			
2			BOARD OF WATER AND LIGHT, LANSING, MICHIGAN			
3			ITEM TO BE PER STANLEY CONSULTANT SPEC. 4848-15,			
4			PAGES DS2-7; DS2-8; DS2-9			
5			ITEM 1 - MOTOR (DUMPER DRIVE)	YES		
6		1	60/30 HP, 1200/600 RPM, TEFC, 460 VOLT,			
7			3 PHASE, 60 CYCLE, 1 HOUR RATED, 60°C. RISE,			
8			NEMA DESIGN D, CLASS B INSULATION, SINGLE			
9			WINDING, BALL BEARING, SQUIRREL CAGE MOTOR			
10			WITH SINGLE SHAFT EXTENSION, SPACE HEATER,			
11			THERMAL PROTECTOR MOUNTED IN MOTOR, DRAIN			
12			PLUG, CONDUIT BOX OPPOSITE STANDARD, AND			
13			SUITABLE FOR CLASS 11, DIVISION 1 LOCATION.			
14			(REF. ITEM 1 ON 5877-3-0401)			
15						
16						
17						
18						
19			ITEM 2 - BRAKE (CUTLER-HAMMER)	YES		
20		1	ELECTRICALLY OPERATED, DC MAGNETIC, MILL			
21			TYPE BRAKE, RATED 1000# FT. CONTINUOUS, WITH			
22			CORROSION RESISTANT FITTINGS, WITH NEMA 3			
23			ENCLOSURE FOR BRAKE. BRAKE TO BE MOUNTED ON			
24			REDUCER H. S. SHAFT. BRAKE ENCLOSURE FOR			
25			RIGHT HAND EXTENSION.			
26			ITEM 2X - BRAKE RESISTOR ENCL. (HOFFMAN ENG. CO.)			
27		1	CAT. A-20N16A NEMA TYPE 1 ENCLOSURE			
28		2	LOUVRE KITS CAT. A-VK-86			
29		2	LOUVRE KITS CAT. A-VK-44			
30			ITEM 3 - CONTROL (BY CUSTOMER)	NO		
31			1-SPEC. CAR DUMPER CONTROLLER, FULL MAGNETIC			
32			REVERSING, COMBINATION WITH CIRCUIT BREAKER,			
33			TWO SPEED FOR SINGLE WINDING MOTOR, FULL			
34			VOLTAGE STARTING, FOR USE WITH MOTOR OF ITEM 1.			
35			CONTROL WILL BE ENCLOSED IN NEMA 1 GENERAL			
36			PURPOSE ENCLOSURE. CONTROL WILL INCLUDE 4/1			
37			CONTROL TRANSFORMER, AC RECTIFIER PANEL WITH			
38			ACCESSORIES FOR 460 VOLT, 60 CYCLE CONVERSION			
39			FOR DC BRAKE OF ITEM 2, TIMING RELAY FOR			
40			AUTOMATIC REVERSAL AND LOAD AND CONTROL TERMINAL			
41			BLOCKS. CONTROL TO PROVIDE THE FOLLOWING			
42			OPERATION: AUTOMATIC OPERATION INITIATED BY "FORWARD P.B."			
43			A. START FORWARD ON LOW SPEED FROM DUMPER			
44			SEATED POSITION			
45			B. TRANSFER TO HIGH SPEED INITIATED BY			
46			SPEED CHANGE LIMIT SWITCH ITEM 5B			
47			C. STOP AT END OF DUMP BY FWD. STOP LIMIT			
48			SWITCH ITEM 5A CUTTING OFF MOTOR AND			
49			SETTING BRAKE			
50			D. START REVERSE AUTOMATICALLY AFTER SHORT			
51			TIME DELAY AT HIGH SPEED			
52			E. TRANSFER TO LOW SPEED INITIATED BY			
53			LIMIT SWITCH ITEM 5B			
54			F. STOP FROM LOW SPEED AT INITIAL STARTING			
55			POSITION BY REVERSE STOP LIMIT SWITCH			
56			ITEM 5C CUTTING OFF MOTOR AND SETTING BRAKE			
57			G. JOG IN EITHER DIRECTION AT LOW SPEED			
58			AFTER SELECTING JOG MODE BY SELECTOR			
59			SWITCH (JOG -AUTO)			
60			H. AUXILIARY RELAYS AS REQUIRED FOR CAR			
61			POSITION SENSING INTERLOCKING			
62			I. SWITCH MOTOR SPACE HEATER "ON" WHEN MOTOR			
63			IS "OFF"			
64			J. THERMOTECTOR CONTROL TO SWITCH A PILOT			
65			LIGHT (LOCATED ON OPERATOR'S CONTROL PANEL)			
66			K. CONTROL TO RELEASE DUMPER MOTOR BRAKE WHEN			
67			MOTOR IS ON (ITEM 2)		4848	15B-8
68			L. RELAY FOR PLATEN SEATED LIMIT SWITCH			
69			ITEM 5D TO OPERATE PILOT LIGHT LOCATED	X		
70			ON OPERATOR'S CONTROL PANEL. "PLATEN			
71			SEATED" OR "DUMPER READY" AND PROVIDE		JAB 10-29-71	
72			CONTACT TO SIGNAL LOCOMOTIVE THAT DUMPER			
73			IS READY FOR NEXT CAR.			
74						
75			CONTINUED			

REV. #	DATE	NAME	DESCRIPTION
3	11/12/70	F.J.C.	ADD LINES 26 - 29
2	4/27/70	F.J.C.	CHANGE LINE 21
1	4/1/70	F.J.C.	CHANGE LINES 42 & 59

5986-3-1301

HEYL & PATTERSON, INC.
CONTRACTING ENGINEERS
PITTSBURGH, U. S. A.

ROTARY RAILROAD CAR DUMPER
B/M ELECTRICAL EQUIPMENT

FOR BOARD OF WATER & LIGHT
FIRST UNIT - DELTA STATION
LANSING, MICHIGAN

DIVISION 13 SCALE
MADE F.J.C. DATE 1-16-70
CHECKED "
APPROVED WES " 1-22-70

THIS DRAWING IS THE PROPERTY OF HEYL & PATTERSON, INC., AND FURNISHED IN CONFIDENCE FOR TEMPORARY USE AND TO BE RETURNED THEREAFTER IF REQUESTED. NOT TO BE COPIED OR DISCLOSED TO OTHERS WITHOUT THE EXPRESS CONSENT OF HEYL & PATTERSON, INC.

BILL OF MATERIAL

LINE	MARK	NO. PCS.	DESCRIPTION	REQ. D IN SHOP	PURCHASING	ACCT'G.
1						
2						
3			H.&P. SIGN ~ ASSEMBLE IN SHOP WITH			
4			END RING ~ 2A-0313			
5		1	22 x 60 H.&P. SIGN DWG. D-2060A	YES		
6		10	1/4φ x 1 LG. RD. HD. STOVE BOLTS STN. STL.	YES		
7		10	1/4φ LOCKWASHERS	YES		
8						
9						
10			~ SHOP PRIME ~			
11			FOR COMPLETE STRUCTURE ALL DIVISIONS			
12			ONE SHOP COAT.			
13						
14						
15		105	GAL. TNEMEC No. 99	YES		
16			RED METAL PRIMER ~ OR EQUAL			
17						
18						
19		5	GAL. SUBLOX CO. PAINT FOR MACH.	YES		
20			COLOR ~ ASA G1 GRAY			
21						
22						
23			SHOP COAT MACHINE FINISHED			
24			SURFACES WITH SLUSHING			
25			COMPOUND GULF NO RUST # 3	YES		
26						
27						
28			PROTECTIVE COATING FOR GEARS			
29			PINIONS ETC. NOT EXPOSED			
30			VALVOLINE TECTYL # 502-C	YES		
31						
32						
33			~ TOOLS & TOOL BOX ~			
34			15° ANGLE OPEN END DOUBLE HEAD WRENCHES	NO		
35		1	FOR 3/8 & 1/2 STD. BOLTS	NO		
36		1	FOR 5/8 & 3/4 STD. BOLTS	NO		
37		1	FOR 7/8 & 1 STD. BOLTS	NO		
38						
39						
40			15° ANGLE OPEN END SINGLE HEAD WRENCHES	NO		
41		1	FOR 1/8 STD. BOLTS	NO		
42		1	FOR 1/4 STD. BOLTS	NO		
43		1	FOR 1/2 STD. BOLTS	NO		
44						
45						
46		1	12" MONKEY WRENCH STEEL HANDLE	NO		
47		1	21" MONKEY WRENCH STEEL HANDLE	NO		
48						
49						
50		1	UNION STEEL CHEST CORP. No. 6032	NO		
51			CARPENTERS TOOL BOX 32" LG. x 8 1/4 W			
52			x 9 1/4 D.P. OR EQUAL			
53						
54						
55		5	GAL. TNEMEC No. 99			
56			RED METAL PRIMER - OR EQUAL			
57			SHIP TO FIELD FOR TOUCH UP			
58						
59						
60						
61						
62						
63						
64						
65						
66			4848 15B-79			
67						
68						
69						
70			JAB 10-29-71			
71						
72						
73						
74						
75						

REV. #	DATE	NAME	DESCRIPTION

THIS DRAWING IS THE PROPERTY OF HEYL & PATTERSON, INC., AND FURNISHED IN CONFIDENCE FOR TEMPORARY USE AND TO BE RETURNED THEREAFTER IF REQUESTED. NOT TO BE COPIED OR DISCLOSED TO OTHERS WITHOUT THE EXPRESS CONSENT OF HEYL & PATTERSON, INC.

5986-3-8701

HEYL & PATTERSON, INC.
CONTRACTING ENGINEERS
PITTSBURGH, U. S. A.

ROTARY RAILROAD CAR DUMPER
B/M FOR H.&P. SIGN-PAINT-TOOLS ECT.

FOR BOARD OF WATER & LIGHT
FIRST AVE. DELTA STATION
LANSING, MICHIGAN

DIVISION 87 SCALE
MADE G. DOLFI DATE 1-18-70
CHECKED T. WEIDNER "
APPROVED W.J. " 2-21-70

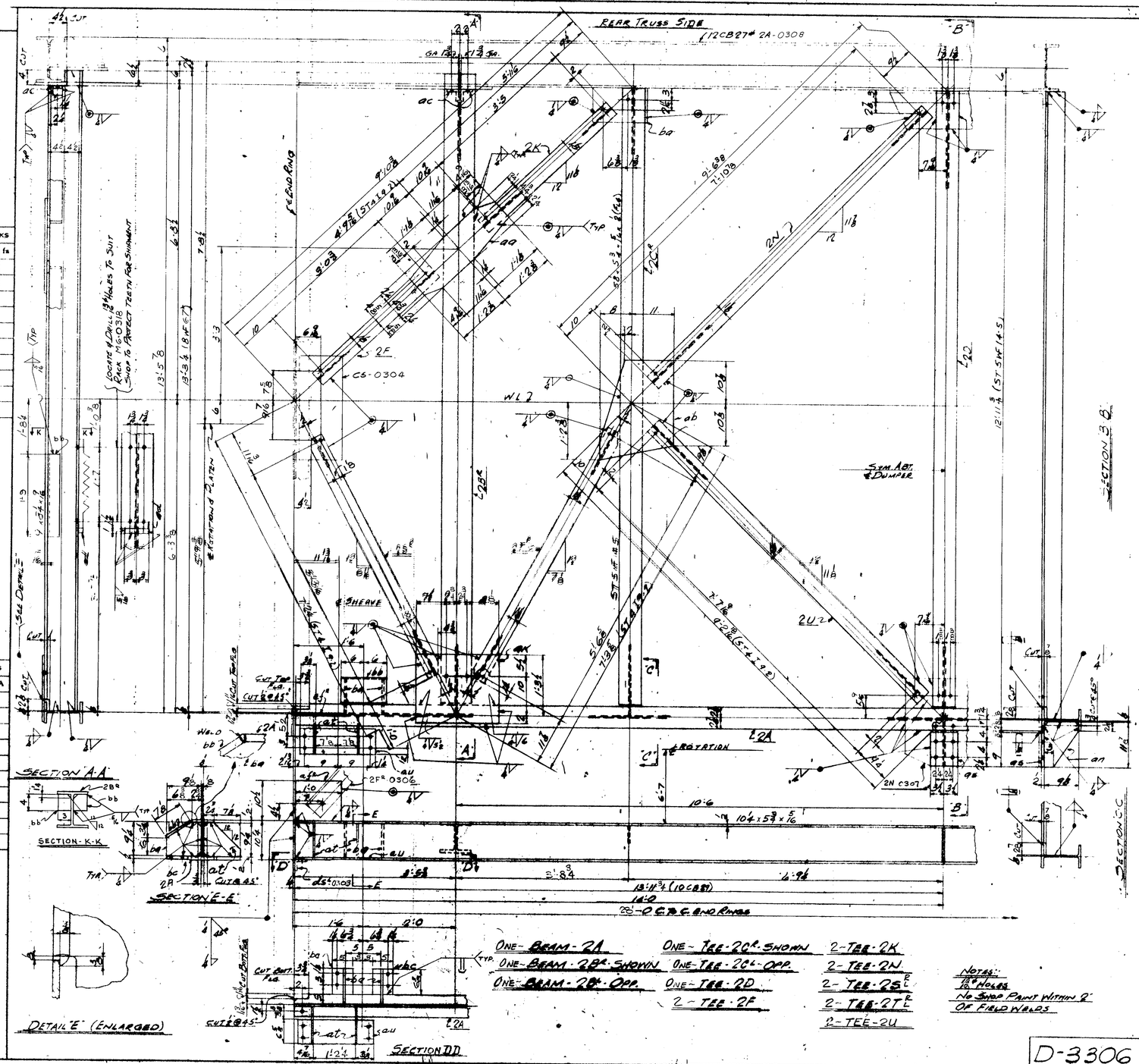

BILL OF MATERIAL

LINE	MARK	NO. PCS.	SECTION	LENGTH	WEIGHT	REMARKS	ITEM No.
1			ONE-BEAM-2A				
2		1	10 CB 29#	27 11½	812		S
3	at	2	PL: 10½ x 7/16	1 0	23		S
4	ak	2	PL: 17½ x 7/16	1 9½	67		S
5	an	1	PL: 9½ x 7/16	0 11½	11		S
6	as	1	PL: 7 x ½	0 9	6		245
7	bq	4	PL: 9½ x 7/16	0 9½	30		S
8	bb	2	PL: 7½ x 7/16	1 0	17		S
9	bc	4	BARS: 5 x ½	0 64	24		S
10	at	4	PL 9½ x 7/16	0 9½	33		S
11	au	2	PL 6½ x 7/16 (823#)	1 8½	25		S
12			2-BEAMS-2B^R				
13			ASSEMBLED IN SHOP & SHIP				
14			WITH M6-0318				
15			#BOLTS A7 & A8-0318				
16		2	BWE 67#	13 3½	1682		S
17	aa	2	PL: 9½ x 7/16	2 6¾	48		S
18	ac	4	LS 3 x 3 x 3/8	0 2¼	4		S
19	ad	2	BARS: 1 x 1	0 6	3		S
20	bb	4	BARS 3 x 4	1 0	280		S
21			1650				
22			2-TEES-2C^R				
23		2	ST 5WF14.5#	12 11¾	363		S
24	ab	2	PL 19 x 7/16	2 1½	87		S
25			475				
26							
27	2D	1	ST 5WF14.5#	12 11¾	198	TEE	S
28							
29	2F	2	ST 4I9.2#	3 4¾	62	TEES	S
30							
31	2K	2	ST 4I9.2#	3 9	69	TEES	S
32							
33	2N	2	ST 4I9.2#	4 2¾	150	TEES	S
34							
35	2S	2	ST 4I9.2#	5 5⅝	105	TEES	S
36							
37	2T	2	ST 4I9.2#	5 9¼	112	TEES	S
38							
39	2U	2	ST 4I9.2#	7 11 7/16	150	TEES	S
40							
41							
42							
43							
44							
45							
46							
47							
48							
49							
50							
51							
52							
53							
54							
55							
56							
57							
58							
59							
60							
61							
62							
63							
64							
65							
66							
67							
68							
69							
70							
71							
72							
73							
74							
75				4232			

SHOP PAINT
SEE B/M 8101

4648 1512-70

J.A.B. 10-29-71

ASSEMBLY MARKS				
aa	ba	ca	da	fa
ab	bb	cb	db	
ac	bc	cc		
ad	bd			
ae				
af				
ag				
ah				
ai				
aj				
ak				
al				
an				
ao				
ap				
aq				
ar				
as				
at				
au				

SHIPPING MARKS			
1A	3A	4A	5A
1B	3B	4B	
1C	3C		
1D			
1E			
1K			
1N			
1S			
1T			
2U			
2X			

REV.	DATE	NAME	DESCRIPTION

THIS DRAWING IS THE PROPERTY OF HEYL & PATTERSON, INC. AND FURNISHED IN CONFIDENCE FOR TEMPORARY USE AND TO BE RETURNED THEREAFTER IF REQUESTED. NOT TO BE COPIED OR DISCLOSED TO OTHERS WITHOUT THE EXPRESS CONSENT OF HEYL & PATTERSON, INC.

5986-3-0310

HEYL & PATTERSON, INC.
CONTRACTING ENGINEERS
PITTSBURGH, U.S.A.

ROTARY RAILROAD CAR DUMPER
DETAIL GOTT TRUSS

FOR: BOARD OF WATER AND LIGHT
FIRST UNIT - DELTA STATION
LANSING, MICHIGAN

DIVISION: 03
MADE: G. DOLFI — DATE: 4-3-70
CHECKED: T. WEISINGER — 4-6-70
APPROVED: W.C. — 4-7-70
SCALE:

4-5877-3-0336

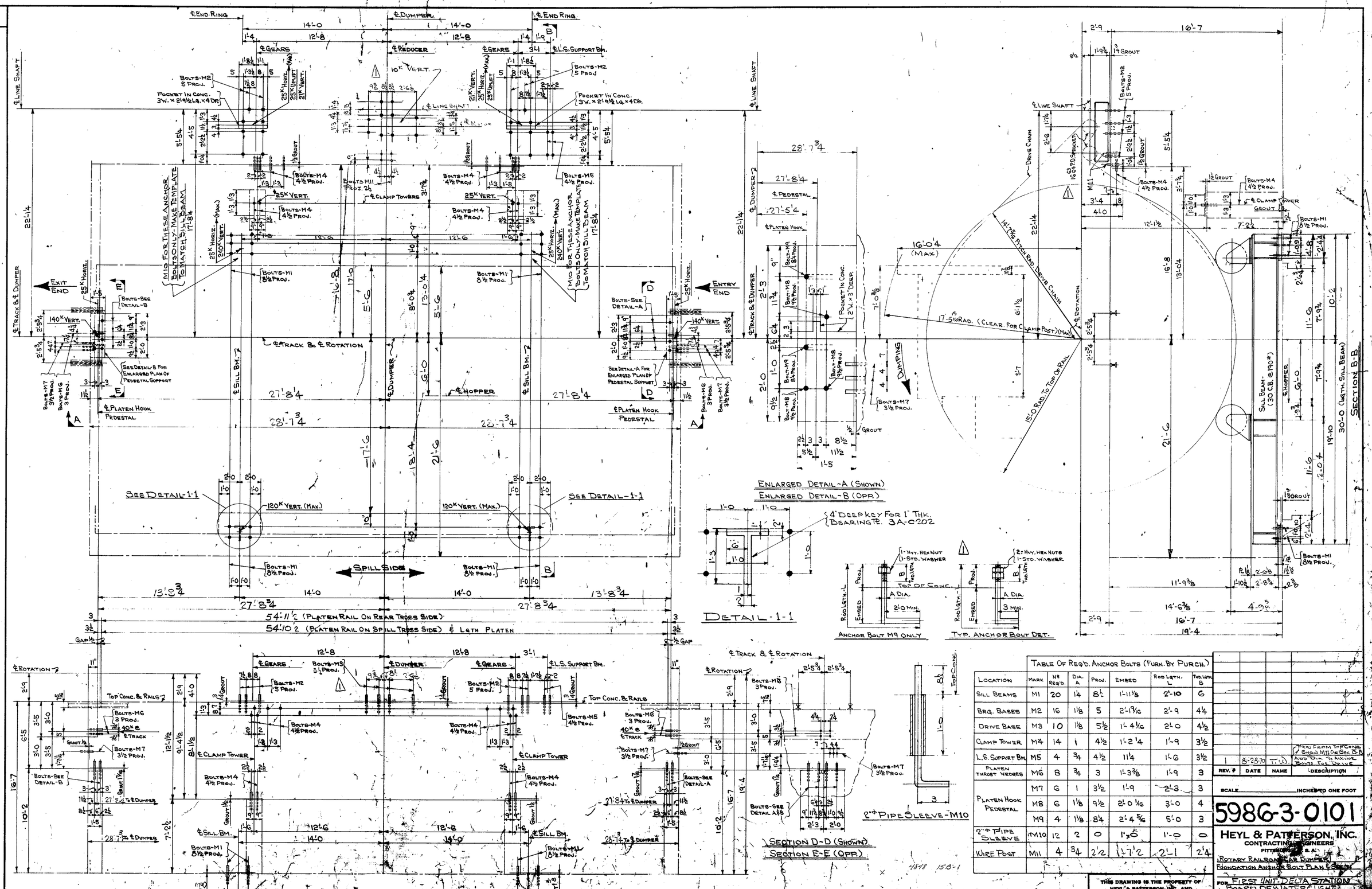

Table Of Req'd. Anchor Bolts (Furn. By Purch.)							
Location	Mark	No Req'd.	Dia. A	Proj.	Embed	Rod Lgth. L	Thd. Lgth. B
Sill Beams	M1	20	1¼	8½	1'-11⅛	2'-10	6
Brg. Bases	M2	16	1⅛	5	2'-1 9/16	2'-9	4¼
Drive Base	M3	10	1⅛	5½	1'-4 1/16	2'-0	4½
Clamp Tower	M4	14	1	4½	1'-2¼	1'-9	3½
L.S. Support Bm.	M5	4	¾	4½	11¼	1'-6	3½
Platen Thrust Wedges	M6	8	¾	3	1'-3⅜	1'-9	3
Platen Hook Pedestal	M7	6	1	3½	1'-9	2'-3	3
	M8	6	1⅛	9½	2'-0 1/16	3'-0	4
	M9	4	1⅛	8¼	2'-4 5/16	5'-0	3
2" ϕ Pipe Sleeve	M10	12	2	0	1" x 6	1'-0	0
Wire Post	M11	4	¾	2½	1'-7½	2'-1	2¼

Rev. #	Date	Name	Description
1	8-25-70	T.W.	Pen From Top Conc. Show M11 On Sec. B-B. Add Dim. To Anchor Bolts For Drive

Scale ____ Inches To One Foot

5986-3-0101

HEYL & PATTERSON, INC.
CONTRACTING ENGINEERS
PITTSBURGH, PA. U.S.A.

Rotary Railroad Car Dumper
Foundation Anchor Bolt Plan & Sections

For First Unit - Delta Station
Board Of Water & Light
Lansing, Michigan

Contract Div. 13 — Proj. No. ____
Made G. Dolfi — Date 11-24-69
Traced ____ — 1-8-70
Checked ____ — 2-6-70
Approved ____
Machinery Bills No. ____

This drawing is the property of Heyl & Patterson, Inc., and furnished in confidence for temporary use and to be returned thereafter if requested, not to be copied or disclosed to others without the express consent of Heyl & Patterson, Inc.

Print Distribution
Item No. ____

1933 Jenkin, A.I.S.E. Mfg. Co., Pgh., Pa.

Erector Note:

Max. Allowable Deviation Of Ring Rail Head From The Plane Of The Ring Must Be Limited To ±⅛ After Erection.

Reference Drawing

Foundation Arrangement	0101
Ga. Arrangement Of Car Sensors	0324
Limit Switch Arrangement	0321
Clamp Lock Arrangement	0106
Rotate Drive Arrangement	0201
Platen Lock Arrangement	0104
Platen Hook & Pedestal Arrangement	0105
Plan Of Dumper	0103
Arrg't Of Car Clamps & Lubrication System	0701

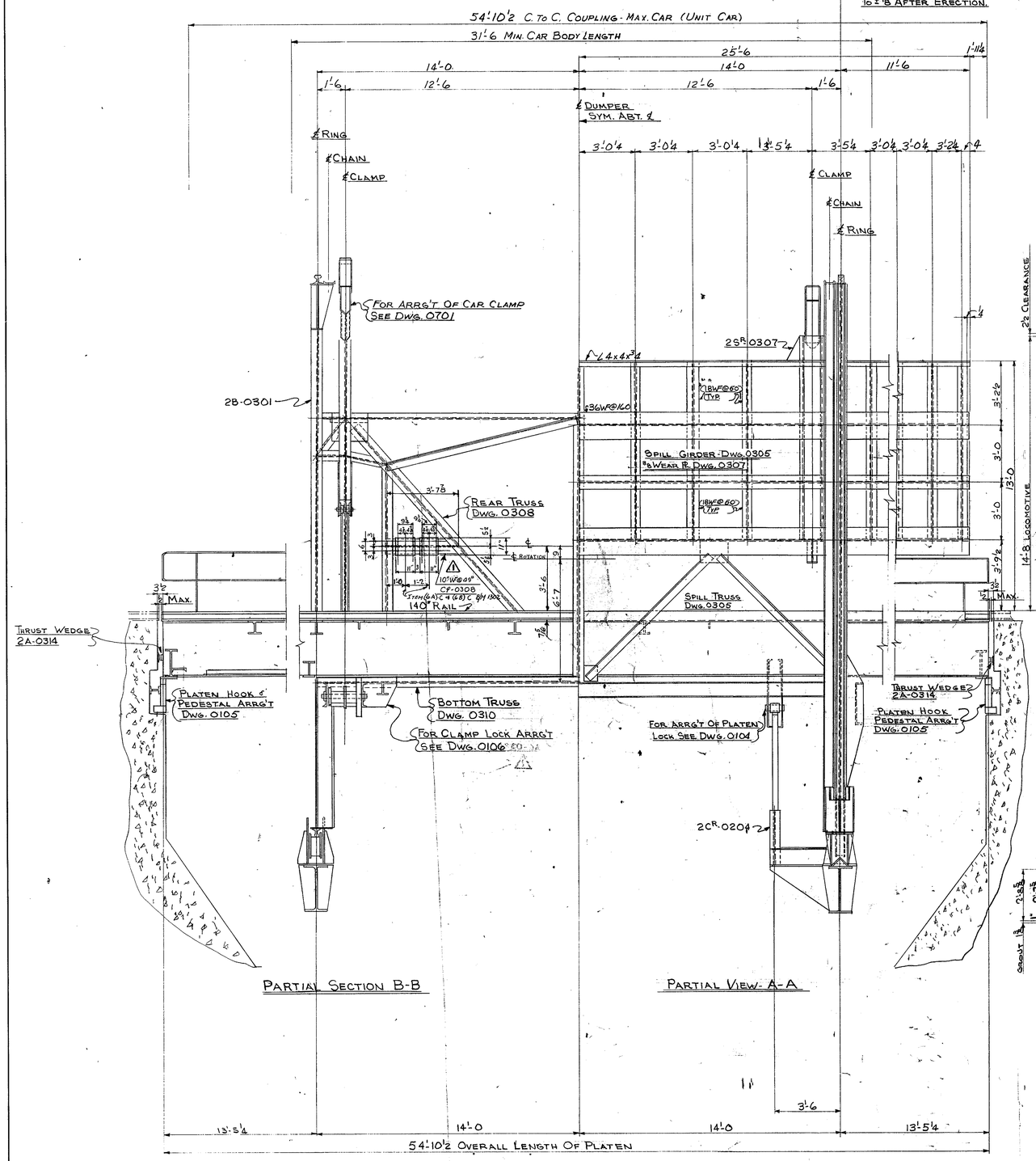

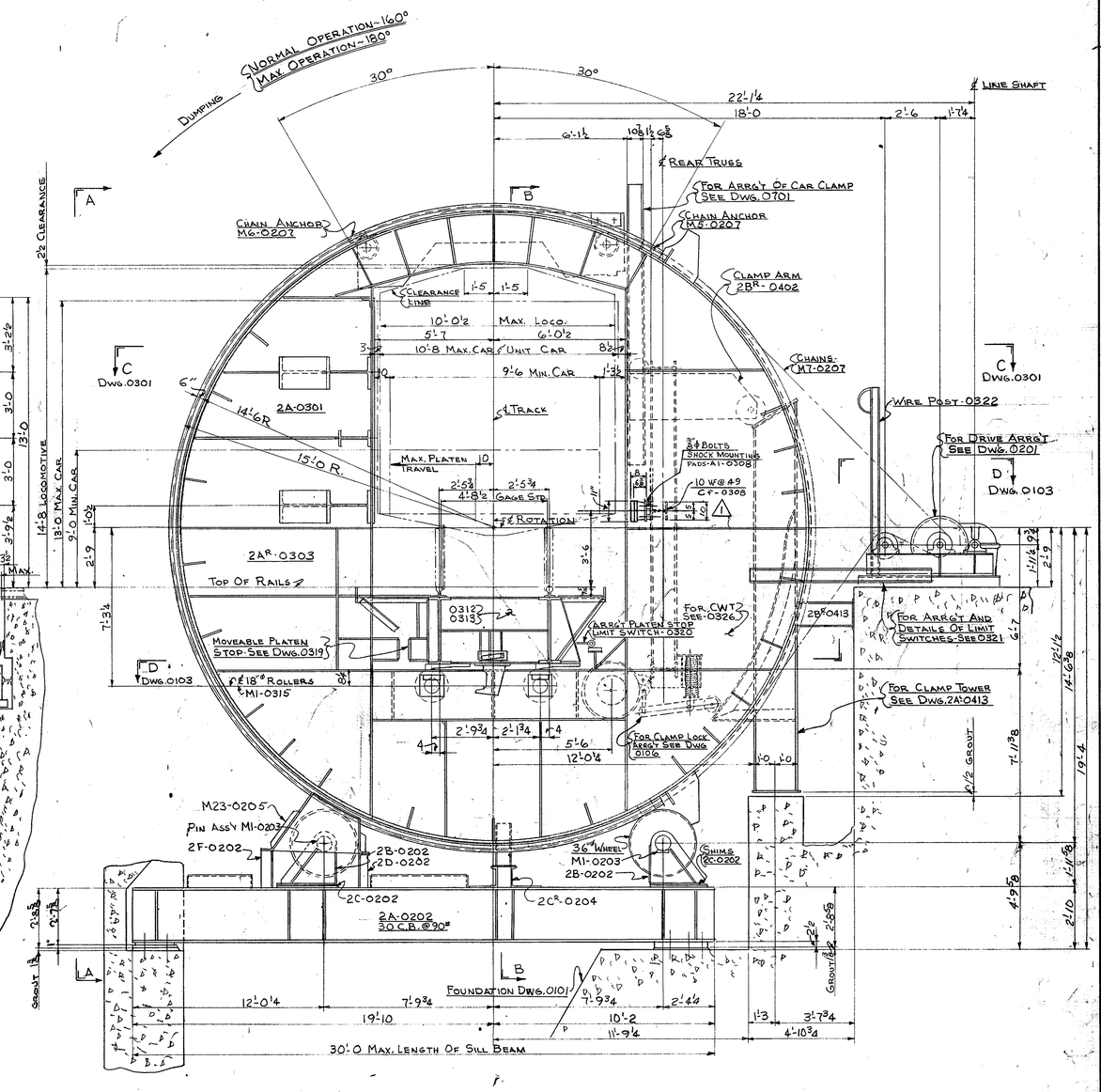

End View Of Car Dumper

REV.#	DATE	NAME	DESCRIPTION
1	1-15-71	S.K.K.	Added Beam 10WF49 - CF

THIS DRAWING IS THE PROPERTY OF HEYL & PATTERSON, INC., AND FURNISHED IN CONFIDENCE FOR TEMPORARY USE AND TO BE RETURNED THEREAFTER IF REQUESTED. NOT TO BE COPIED OR DISCLOSED TO OTHERS WITHOUT THE EXPRESS CONSENT OF HEYL & PATTERSON, INC.

5986-3-0102

HEYL & PATTERSON, INC.
CONTRACTING ENGINEERS
PITTSBURGH, U.S.A.

Rotary Railroad Car Dumper
General Arrangement
Elevations
For Board Of Water And Sewer
First Cut - Delta Structure
Lansing, Michigan

Division 21
Made G. Dolfi
Checked J. P. Fontal
Approved W.J.

4898 168-2

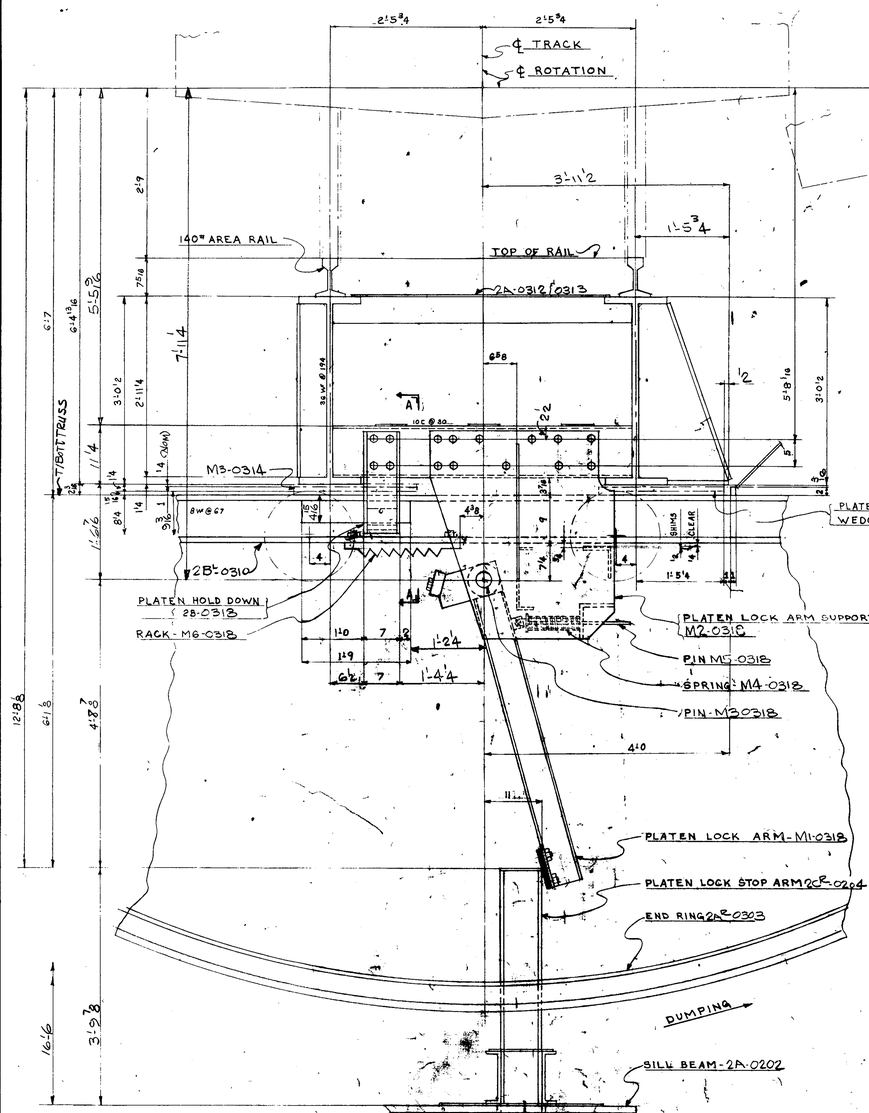

ARRANGEMENT OF PLATEN LOCK

DUMPER SEATED

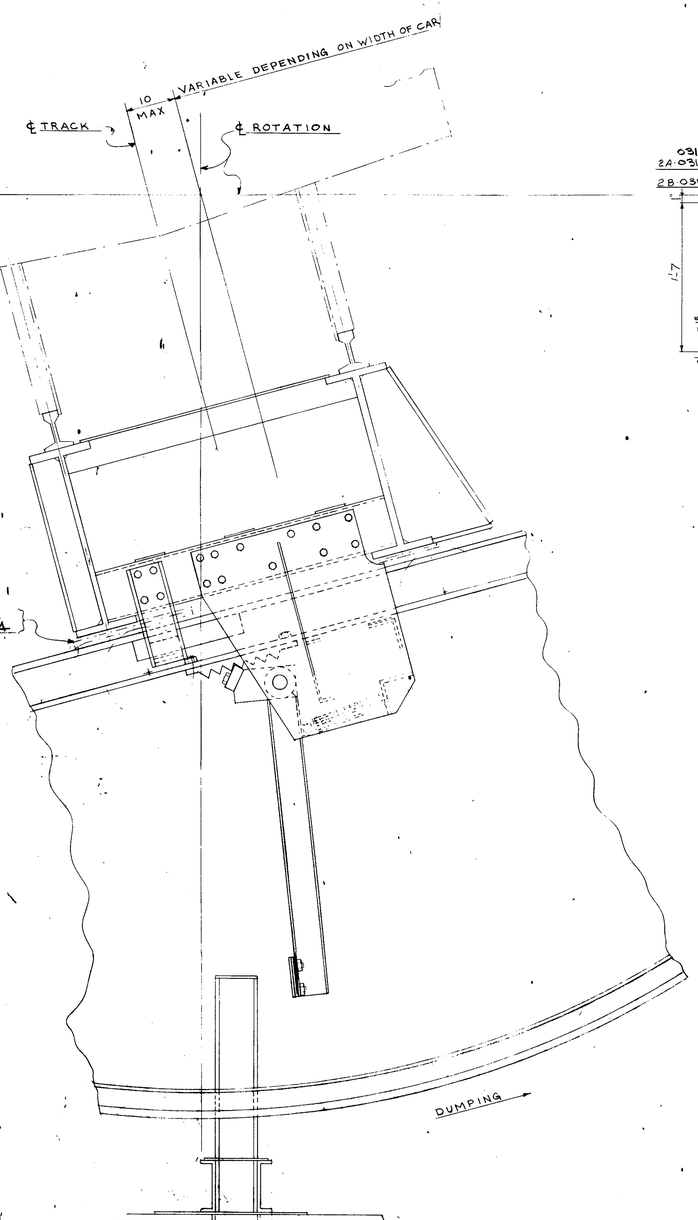

DUMPER ROTATED TO SHOW PLATEN IN TYPICAL LOCKED POSITION

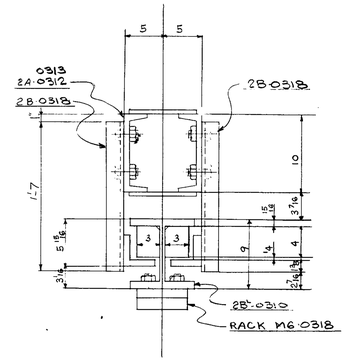

SECTION ~ A-A

REV. #	DATE	NAME	DESCRIPTION

SCALE 1" INCHES TO ONE FOOT

5986-3-0104

HEYL & PATTERSON, INC.
CONTRACTING ENGINEERS
PITTSBURGH, U. S. A.

ROTARY RAILROAD CAR DUMPER
GEN. ARRGT PLATEN LOCK

FOR BOARD OF WATER & LIGHT
FIRST UNIT ~ DELTA STATION
LANSING, MICHIGAN

CONTRACT DIV. 01
MADE SL-OLF
TRACED
CHECKED T. WEIDNER
APPROVED
MACHINERY BILL No.

DRAWING No.
DATE 2-12-70
DATE
DATE 2-13-70
DATE

THIS DRAWING IS THE PROPERTY OF HEYL & PATTERSON, INC., AND FURNISHED IN CONFIDENCE FOR TEMPORARY USE AND TO BE RETURNED THEREAFTER IF REQUESTED. NOT TO BE COPIED OR DISCLOSED TO OTHERS WITHOUT THE EXPRESS CONSENT OF HEYL & PATTERSON, INC.

PRINT DISTRIBUTION

1963 ZENITH, A.B.S. SMITH CO., POR., PE.

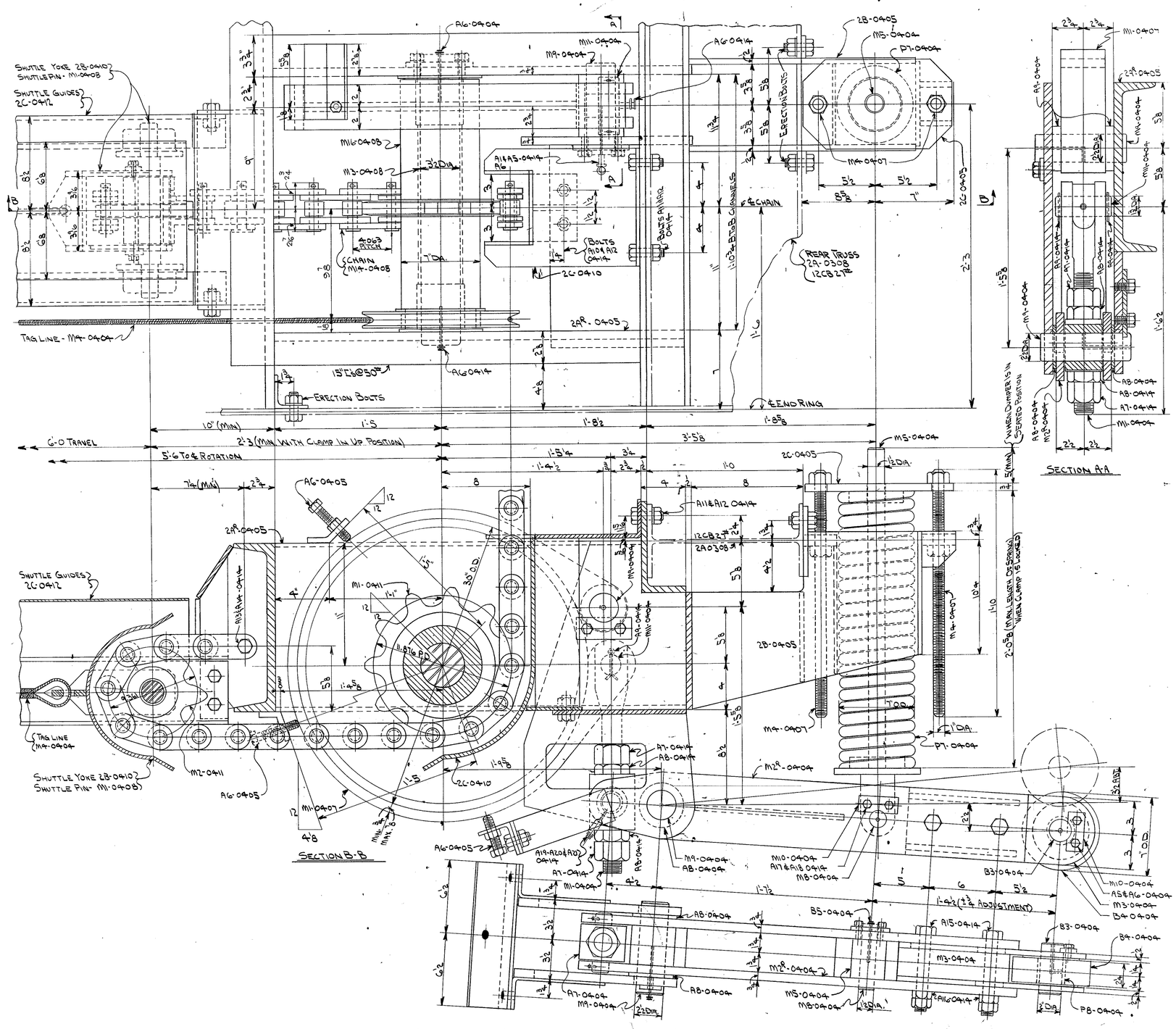

BILL OF MATERIAL

LINE	MARK	NO. PCS.	DESCRIPTION		WEIGHT	REQ'D. IN SHOP
1			CLAMP LOCK ARRANGEMENT			
2			ASSEMBLE IN SHOP AS PER DWG. 0104			
3			MATL LISTED FOR 2-CLAMP LOCKS-1-R.H. & 1-L.H.			
4	2B9	REF.	2-CLAMP LOCK SUPPORT	DWG 0405		
5	2B	REF.	2-CLAMP LOCK SPRING BOX	DWG 0405		
6	2C	REF.	2-SPRING KEEPER PLATE	DWG 0405		
7	2C	REF.	2-CHAIN GUARD	DWG 0410		
8	M3	REF.	2-SPROCKET BRAKEWHEEL PIN	DWG 0408		
9	M1	REF.	2-LOCK DRUM BAND	DWG 0407		
10	M4	REF.	4-SPRING ADJUSTING BOLTS	DWG 0407		
11	M1	REF.	2-THRUST RODS	DWG 0404		
12	M2	REF.	2-MAIN LEVERS	DWG 0404		
13	M3	REF.	2-ROLLER ADJUSTERS	DWG 0404		
14	M5	REF.	2-SPRING SEATS	DWG 0404		
15	M8	REF.	2-PINS	DWG 0404		
16	M9	REF.	4-PINS	DWG 0404		
17	M10	REF.	2-KEEPER BARS	DWG 0404		
18	P7	REF.	2-SPRINGS	DWG 0404		
19	A8	REF.	4-WASHERS	DWG 0404		
20	A9	REF.	4-WASHERS	DWG 0404		
21	M11	REF.	2-PINS	DWG 0404		
22	M1	REF.	2-SPROCKET-BRAKEWHEEL UNIT	DWG 0411		
23	M2	REF.	2-SPROCKETS SHUTTLE -	DWG 0411		

4/8/48 16B-6

R.W.H.

5986-3-0106

HEYL & PATTERSON, INC.
CONTRACTING ENGINEERS
PITTSBURGH, U.S.A.

ROTARY RAILROAD CAR DUMPER
CLAMP LOCK ARRANGEMENT

FOR - BOARD OF WATER AND LIGHT
FIRST UNIT - DELTA STATION
LANSING MICHIGAN

REV. #	DATE	NAME	DESCRIPTION

THIS DRAWING IS THE PROPERTY OF HEYL & PATTERSON, INC. AND FURNISHED IN CONFIDENCE FOR TEMPORARY USE AND TO BE RETURNED THEREAFTER IF REQUESTED. NOT TO BE COPIED OR DISCLOSED TO OTHERS WITHOUT THE EXPRESS CONSENT OF HEYL & PATTERSON, INC.

DIVISION
MADE GOD — SCALE 3/4"=1'-0" — DATE 1-30-90
CHECKED J.P. FUNTAL — " 1-30-90
APPROVED WH — " 2-7-90

D3291

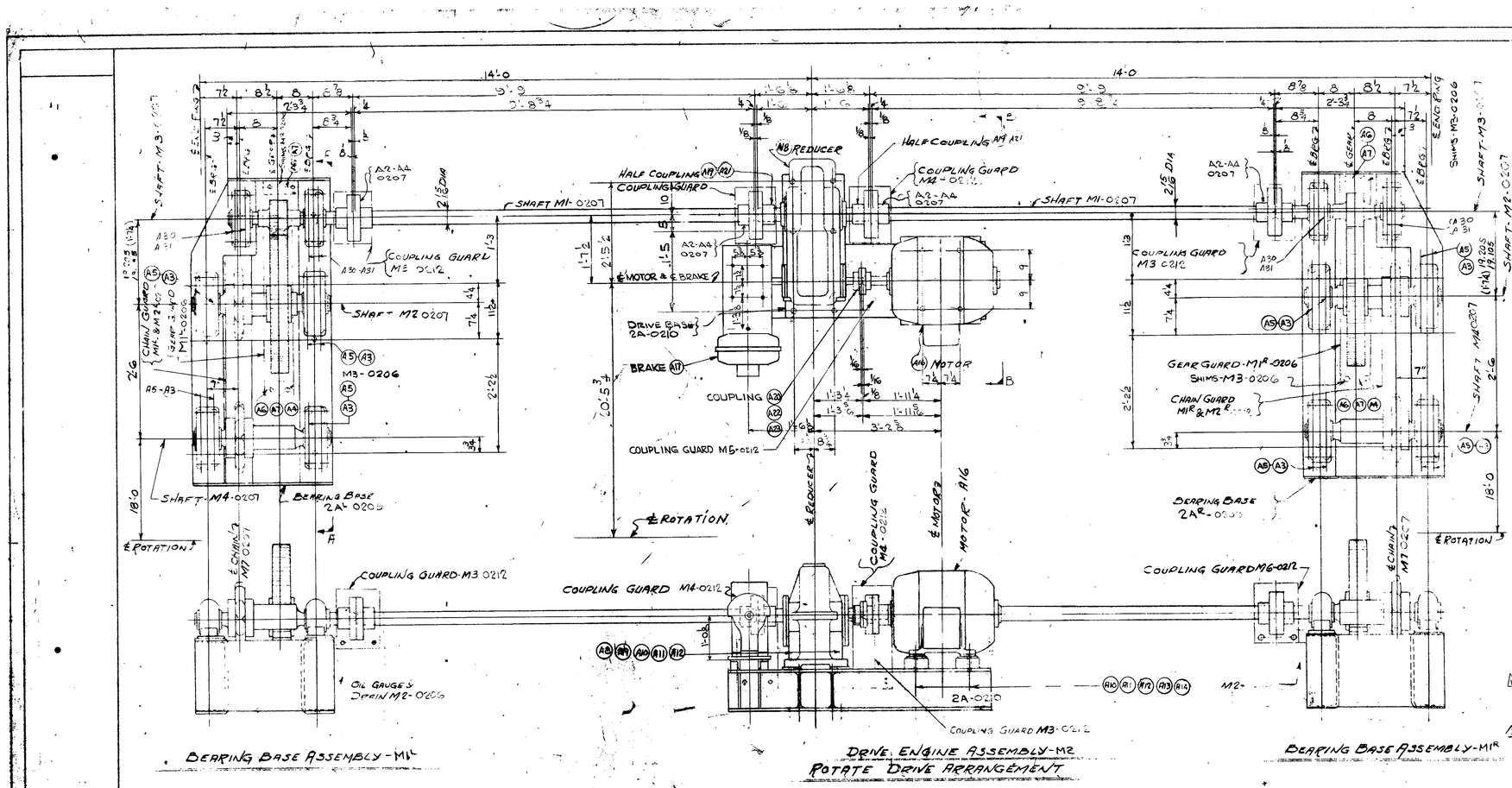

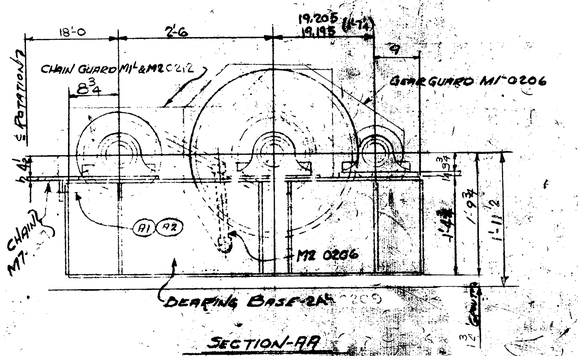

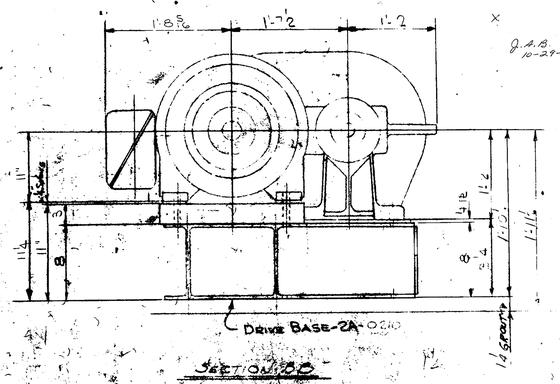

BILL OF MATERIAL

			DESCRIPTION	WT	MAT'L
M1	REF	2	LINE SHAFTS DWG 0207		
			2-BEARING BASE ASSEMBLIES-1-M1R & 1-M1L		
			ASSEMBLE IN SHOP AS PER DWG. 0201		
M3	REF	2	PINION SHAFTS DWG 0207		
M2	REF	2	INTERMEDIATE SHAFTS DWG 0207		
M4	REF	2	IDLER SHAFTS DWG 0207		
M1R & M2R	REF	2	CHAIN GUARDS DWG		
M1R & M2R	REF	2	CHAIN GUARDS DWG		
M6	REF	6	COUPLING GUARDS DWG 0212		
2A & 2AR	REF	2	BEARING BASE DWG 0209		
M3	REF	4	SHIM SETS DWG 0206		
M1R & M2R	REF	2	GEAR GUARDS DWG		
M2	REF	2	OIL GAUGE & DRAIN DWG 0206		
A1		8	5/8" ASH BOLTS x 1 1/2 LG (OMIT NUTS ON A)		FOR M1R & DWG 0-[illegible]
A2		8	5/8" SQ LOCKWASHERS		
A3		36	3/4" ASH BOLTS x 0'-4 1/2 LG		
A4		4	5/8" STD BEVEL WASHERS		
A5		26	3/4" CHECK NUTS-HEX		
A6		9	5/8" ASH BOLTS x 2 1/2 LG		
A7		8	5/8" SQ LOCKWASHERS		
A30		16	5/8" ASH BOLTS x 4'-2" LG		
A31		116	5/8" CHECK NUTS-HEX		
			DRIVE DRIVE ENGINE ASSEMBLY-M2		
			ASSEMBLE IN SHOP AS PER DWG 0201		
2A	REF	1	ENGINE BASE DWG 0210		
M2	REF	2	SHIM SETS DWG 0206		
M1	REF	4	SHIM SETS DWG 0206		
M4	REF	2	COUPLING GUARD DWG 0212		INSTALL IN FIELD
M5	REF	1	COUPLING GUARD DWG 0212		
A16	REF	1	MOTOR 60% 30 HP [illegible] 1200/600 RPM. ITEM No 1 S/N 30[illegible] 460 / 3PH 60CY.		
A17	REF	1	BRAKE - CUTLER HAMMER BVL 505 16" MILL TYPE RATED 1000 LB FT. CONT WITH NEMA 3R ENCLOSURE ITEM No 2 S/N 130[illegible]		
A18	1		REDUCER LOW-IN PARALLEL SHAFT TYPE D195C - RATIO 13.3 to 1 (STD KEYWAYS) RATED AT ABT 164 HP @ 1150 RPM INPUT ASSEMBLY LR-LR - STD LOW SPEED SHAFT EXT RIGHT HAND HIGH SPEED SHAFT (STD.) LEFT HAND HIGH SPEED SHAFT 1" SLT REQ'D SHAFT END		P.D. 3 APP. PAINT
A19	1		COUPLING - FALK 30622-MADE UP OF 2 RIGID HALVES - PLAIN FACE TYPE - NO MALE OR FEMALE STEEL - COMP. WITH BOLTS BORE HUBS 4.4[illegible] 4.4[illegible] DIA KONAL 1 x 2 FOR STRAIGHT KEYS	74	
A20	1		COUPLING WALDRON FLEX. SIZE 3 1/2 A MALE HUB BORED 3.372 / 3.373 (MOTOR) FEMALE HUB BORED [illegible] / 2.[illegible]47 (REDUCER) K.S. FOR ST. KEYS		
A21	2		ST KEYS 1 x 1 x 6" LG		REDUCER
A22	2		ST KEYS 1/2 x 1/2 x 4" LG		REDUCER
A23	1		ST KEY 3/8 x 3/8 x 6" LG.		MOTOR
A8	6		1" x 4 LG ASH BOLTS		REDUCER
A9	6		1" CHECK NUTS-HEX		
A10	4		#8 TAPER DOWEL PIN STRD END PER [illegible]		
A11	4		1/2" HEX NUTS		
A12	4		1/2" PLAIN WASHERS		
A13	4		3/4" x 4" LG ASH BOLTS		MOTOR
A14	4		3/4" HEX CHECK NUTS		
A15	4		1" x 5 1/2 LG ASH BOLTS		BRAKE
A24	4		1" HEX CHECK NUTS		
			LUBRICANTS		
		10	GAL GULF OIL "EPSS" FOR WINTER OR EP 95 FOR SUMMER - FOR REDUCER		
		18	LB HIGH PRESSURE GREASE FOR BEARINGS		
		4	PT GULF ANTI-FRICTION OR MEL FOR FLEX CPLG.		

	DATE	NAME	DESCRIPTION
2	7-13-71	H	REV. LINES SO NOS 3,798 3,799

SCALE 1/2" = 1" INCHES TO ONE FOOT

5986-30201

HEYL & PATTERSON, INC.
CONTRACTING ENGINEERS
PITTSBURGH, PA.

RAILROAD CAR DUMPER
ROTATION DRIVE ARRANGEMENT
AND ASSEMBLY
B. & O. OF WATER AND LIGHT
CRS UNIT [illegible] STATION

DATE 8-20-70
DRAWN J.B. FINTAL 8-28-70
SUPERVISOR 7-6-71

D-2954

THIS DRAWING IS THE PROPERTY OF HEYL & PATTERSON, INC. FURNISHED IN CONFIDENCE FOR TEMPORARY USE. SHALL NOT BE REPRODUCED OR COPIED OR USED FOR ANY OTHER PURPOSE WITHOUT THE WRITTEN CONSENT OF HEYL & PATTERSON, INC.

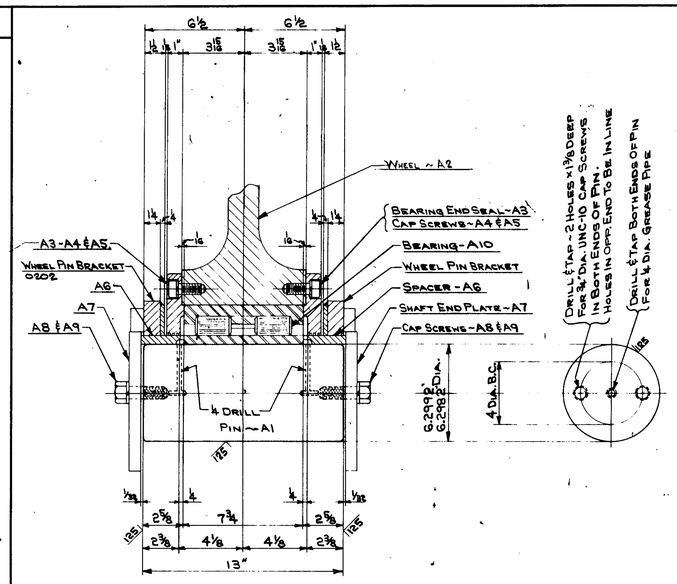

Roller Pin Assembly ~ M1

Assemble In Shop With Wheel Pin Bracket

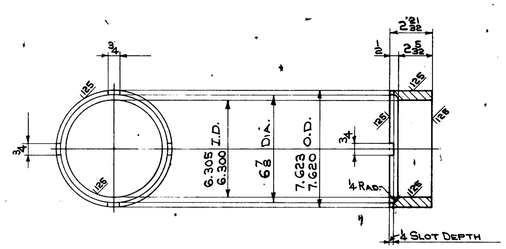

Spacer ~ A6

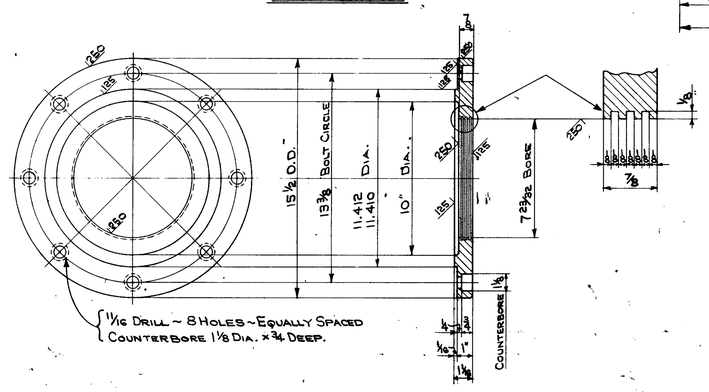

Bearing End Seal ~ A3

Suppliers Note ~

Supplier To Finish Machine Flanges & Tread To A Tolerance Of +2 To +4 Tapers (1/4" To 1/2") Over In Circumference. Supplier To Rough Bore To 11 1/8" Dia. Hubs Rough Faced To 8 1/8" Length Thru Bore ~ Hubs Central.

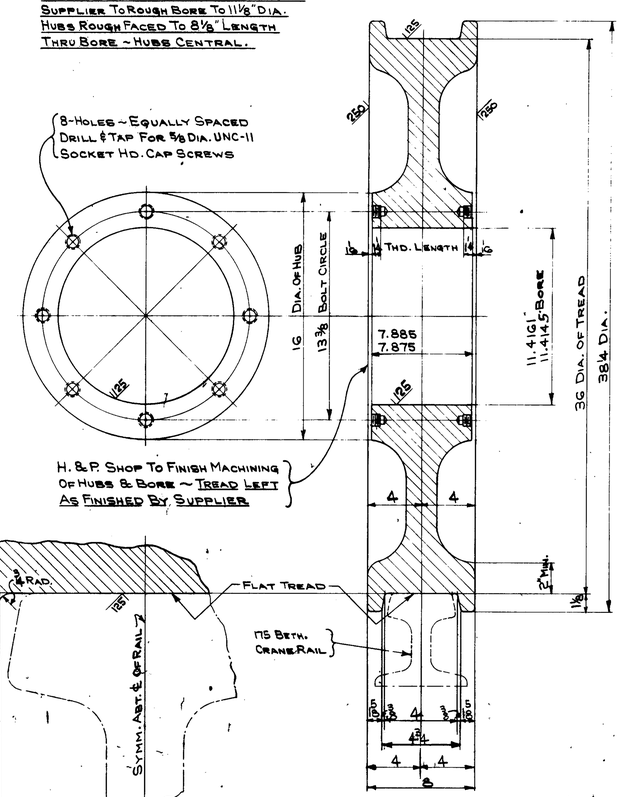

36" Dia. Double Flange Crane Wheels ~ A2

Wrought Steel ~ Rim Toughened

U.S.S. Section No S1673A Modified

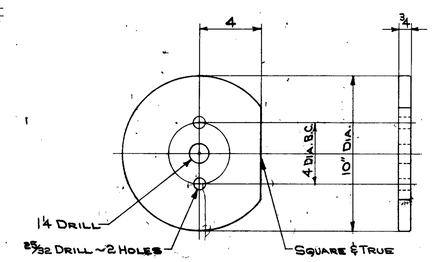

Shaft End Plate ~ A7

BILL OF MATERIAL

LINE	MARK	NO. PCS.	DESCRIPTION	WEIGHT	REQ'D. IN SHOP			
1								
2			4 ~ Roller Pin Assemblies ~ M1					
3			Assemble In Shop With Wheel					
4			Pin Bracket 2B-0202					
5								
6	A1	4	Pins 6 3/4 Dia. x 1'-1 1/2 Lg.	452			S	
7			C-1045 Hot Rolled Stl. ~ R.Wt. = 548#					
8								
9	A2	4	36" Double Flange Crane Wheels	3060				
10			Wrought Steel ~ Rim Toughened					
11			U.S.S. Section No S1673A Modified					
12			Approx. Wt. = 1265# Each.					
13			See Suppliers Note On Dwg.					
14	A10	4	Hyatt Roller Brg's.	472				
15			A-6232 + 5232 WB (2)					
16	A3	8	Brg. End Seals ~ Turn From	336				
17			8-Pc 16 x 14 x 1'-4 R.Wt. = 734#				S	
18	A4	64	5/8 Dia. UNC-11 Socket Hd. Cap Scr. x 1 1/4 Lg.					
19	A5	64	5/8" Shakeproof Lock Washer No 1228					
20								
21	A6	8	Spacers ~ Make From	86				
22			8-Pcs Seamless Stl. Tubing					
23			8" O.D. x 6" I.D. x 3" Lg. R.Wt. = 150#					
24								
25	A7	8	Shaft End Plates ~ Make From	120				
26			8-Pc 9 1/4 x 3/4 x 0'-10 3/8 R.Wt. = 170#				S	
27	A8	16	3/4" Dia. UNC-10 Hex Hd. Cap Scr. x 2" Lg.					
28	A9	16	3/4" Shakeproof Lockwasher No 1232					
29								
30								
31								
32								
33								
34								
35								
36								
37								
38								
39								
40								
41								
42								
43								
44								
45								
46								
47								
48								
49								
50								
51								
52								
53								
54								
55								
56								
57								
58								
59								
60								
61								
62								
63								
64			Shop Paint Div. - 87					
65								
66								
67								
68			4848 168-31					
69								
70								
71			J.A.B. 10-29-71					
72								
73								
74								
75								

REV. #	DATE	NAME	DESCRIPTION

THIS DRAWING IS THE PROPERTY OF HEYL & PATTERSON, INC., AND FURNISHED IN CONFIDENCE FOR TEMPORARY USE AND TO BE RETURNED THEREAFTER IF REQUESTED, NOT TO BE COPIED OR DISCLOSED TO OTHERS WITHOUT THE EXPRESS CONSENT OF HEYL & PATTERSON, INC.

5986-3-0203

HEYL & PATTERSON, INC.
CONTRACTING ENGINEERS
PITTSBURGH, U. S. A.

Rotary Railroad Car Dumpers
Details Of Roll Wheel Assy.
Brg. End Seal ~ Spacer & Shaft End Plate
For Board Of Water & Light
Fire Unit ~ Delta Station
Lansing, Michigan

Division 62 Scale
Made G. Dolan Date
Checked J. Wagner
Approved W.F.

51-0010
D-3828

SHIPPING MARKS			
2A	3A	4A	5A
2B	3B	4B	
2C	3C		
2D			
2F			
2K			
2N			
2S			
2T			
2U			
2X			

ASSEMBLY MARKS				
aa	ba	ca	da	fa
ab	bb	cb	db	
ac	bc	cc		
ad	bd			
af				
ak				
an				
as				
at				
au				
ax				

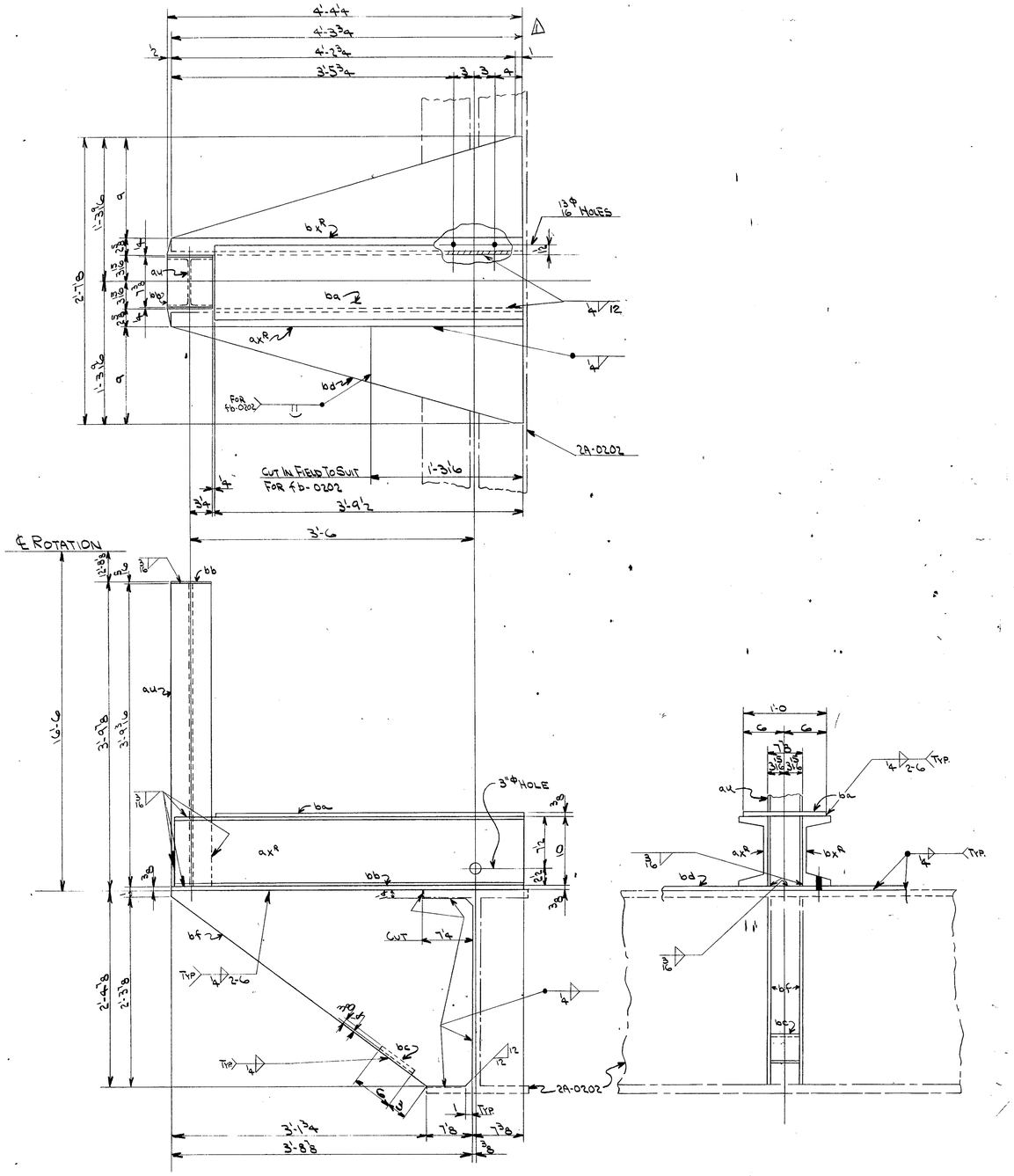

ONE-PLATEN LOCK STOP ARM 2C^R SHOWN
ONE-PLATEN LOCK STOP ARM 2C^L - OPP.

NOTE:
HOLES AS NOTED

BILL OF MATERIAL

LINE	MARK	NO. PCS.	SECTION	LENGTH		WEIGHT	REMARKS	ITEM NO.	PURCH.	ACCT'G.
1										
2										
3										
4			ONE-PLATEN LOCK STOP ARM - 2C^R SHOWN							
5			ONE-PLATEN LOCK STOP ARM - 2C^L OPP							
6										
7	aa	2	BWF @ 24	3	9 7/16	180		S		
8	ax^R	2	10C @ 15.3	4	3 3/4	132		S		
9	ba	2	PL 12 x 3/8	3	9 1/2	124		S		
10	bb	2	PL 6 1/2 x 9/16	0	7 3/8	9		S		
11	bc	2	BAR 6 x 3/8	0	7 7/8	20		S		
12	bd	2	PL 31 1/8 x 3/8	9	4 1/4	340		S		
13	bf	4	PL 28 3/8 x 3/8	3	8 1/8	285		S		
14	bx^R	2	10C @ 15.3	4	3 3/4	132		S		
15			(1222)							
16										
17										
18										
19										
20										
21										
22										
23										
24										
25										
26										
27										
28										
29										
30										
31										
32										
33										
34										
35										
36										
37										
38										
39										
40										
41										
42										
43										
44										
45										
46										
47										
48										
49										
50										
51										
52										
53										
54										
55										
56										
57										
58										
59										
60										
61										
62										
63										
64										
65										
66										
67										
68										
69										
70										
71										
72										
73										
74										
75										
76										
77										
78										
79			PAINT SEE DW. 8701							
80										
81										
82										
83										
84										
85										
86										
87										
88										
89										
90										
91								4818 128-32		
92										
93										
94										
95								F.A.B. 10-29-71		
96										
97										
98										
99										
100			TOTAL WT.			1222				

REV. #	DATE	NAME	DESCRIPTION
1	6-17-71	T.W.	4-3 3/4 WRONG LOCATION

THIS DRAWING IS THE PROPERTY OF HEYL & PATTERSON, INC., AND FURNISHED IN CONFIDENCE FOR TEMPORARY USE AND TO BE RETURNED THEREAFTER IF REQUESTED. NOT TO BE COPIED OR DISCLOSED TO OTHERS WITHOUT THE EXPRESS CONSENT OF HEYL & PATTERSON, INC.

59863-0204

HEYL & PATTERSON, INC.
CONTRACTING ENGINEERS
PITTSBURGH, U.S.A.

ROTARY RAILROAD CAR DUMPER
DETAILS OF PLATEN LOCK STOP ARM

FOR BOARD OF WATER & LIGHT
FIRST UNIT - DELTA STATION
LANSING, MICHIGAN

DIVISION 02
MADE G. DOLEI
CHECKED T. WEIDNER
APPROVED TW
SCALE 1/2"=1'-0"
DATE 7-29-71
" 7-29-71
" 7-29-71

HEYDEN PITTSBURGH

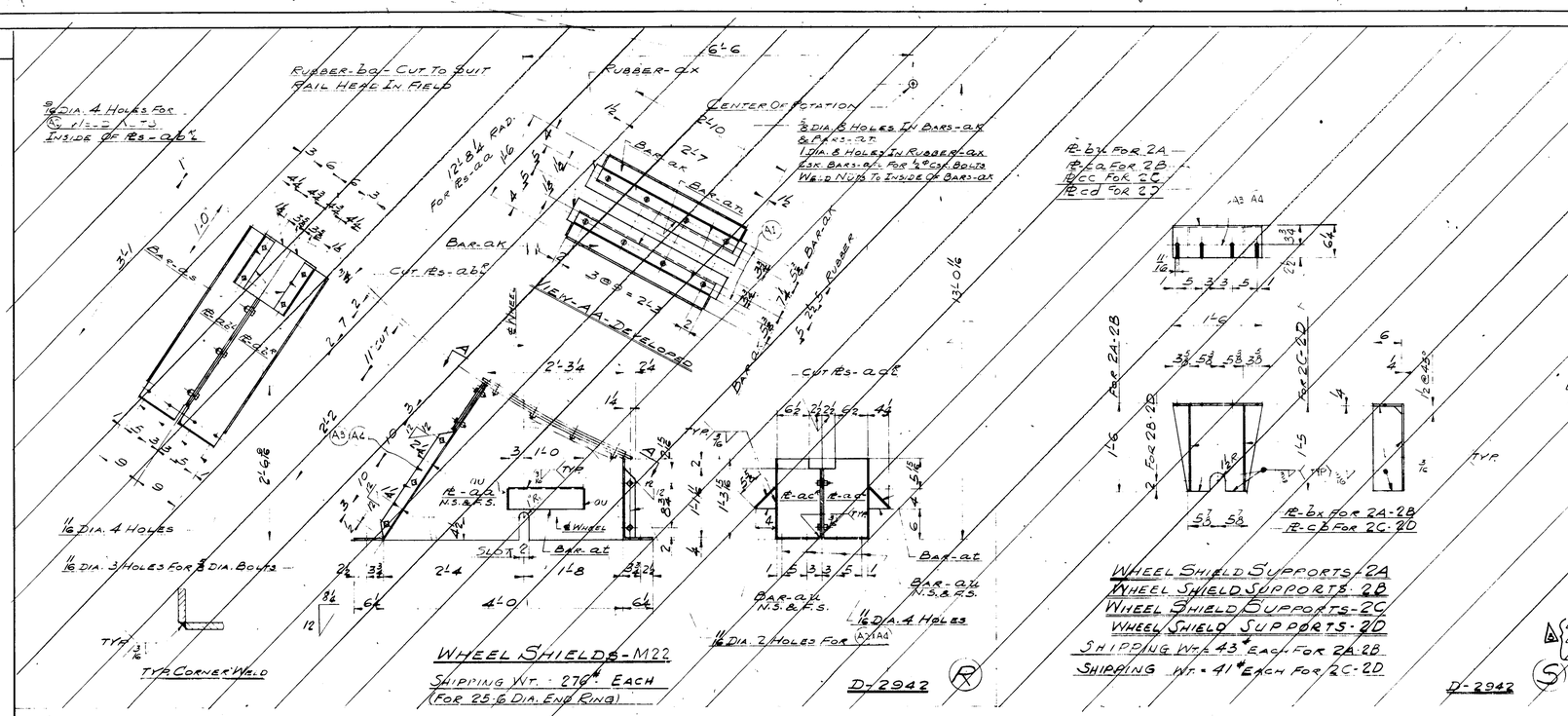

BILL OF MATERIAL

LINE	MARK	AMT.	DESCRIPTION	WT.	REC'D IN SHOP	T. No.
1			2-WHEEL SHIELDS-M22			
2	aa	4	#s-30 3/8 x 4 x 4'-0	344		1/16 30 3/8 x 4 x 6'-8 - 8-3/4" CUTS
3	ab	4	#s 1 3/4 x 4 x 3'-7" BENT	136		
4	ac	4	#s 10 3/4 x 4 x 1'-9 11/16 - BENT	68		
5	ak	4	BARS 5 3/8 x 4 x 2'-7 - BENT	47		
6	al	4	FARS 2 1/4 x #10 x 2'-7 - BENT	10		
7	ag	4	FARS 2 1/4 x #10 x 0'-11	4		
8	af	4	FARS 5 3/8 x 4 x 1'-3	24		
9	aj	5	BARS 4 x 4 x 0'-4"	5		1 BARS 4 x 4 x 1'-8 - 2 CUTS
10			SKIRT BOARD RUBBER - PURE GUM RUBBER			
11			40 DUROMETER, STYLE 140			
12	ax	4	PCS. 6" WIDE x 1/4" THK. x 2'-10" LG	6		
13	ba	4	PCS. 6" WIDE x 1/4" THK x 1'-0"	3		
14	A1	10	1/2" x 1 1/2" LG. C'SK. HD. SLOTTED MACH.	3		
15			BOLTS - HEX. NUTS.			
16	A2	8	1/2" ASR. BOLTS x 1 3/4" LG			
17	A3	10	3/8" ASR. BOLTS x 1 1/2" LG	3		
18	A4	10	3/8" SP. LOCKWASHERS			
19			6.49			
20			2-WHEEL SHIELDS-M23			
21	bb	4	PCS 3 1/2 x 4 x 4'-0"	349		S
22	bc	4	#s 8 3/4 x 4 x 3'-2	97		S
23	bd	4	#s 8 3/4 x 6 x 1'-4 1/8	41		S
24	bn	4	BARS 5 3/8 x 4 x 2'-7 1/2 - BENT	50		S
25	bs	4	BARS 2 1/4 x #10 x 2'-7 1/2 - BENT	10		S
26	as	4	BARS 2 1/4 x #10 x 0'-11"	4		S
27	ac	4	BARS 5 3/8 x 4 x 1'-3	24		S
28	au	8	BARS 4 x 4 x 0'-4"	5		S
29			SKIRT BOARD RUBBER - PURE GUM RUBBER			
30			40-DUROMETER, STYLE 140			
31	bt	4	PCS 5" WIDE x 1/2" THK. x 2'-10 1/2" LG	6		
32	bu	4	PCS 6" WIDE x 1/2" THK x 1'-0" LG	3		
33	A1	16	1/2" x 1 3/4" LG. C'SK. HD. SLOTTED MACH.	3		
34			BOLTS - HEX. NUTS.			
35	A2	8	1/2" ASR. BOLTS x 1 3/4" LG.			
36	A3	10	3/8" ASR. BOLTS x 1 1/2" LG	3		
37	A4	10	3/8" SP. LOCKWASHER.			
38	ca	4	BAR 2 1/4 x 4 x 2'-2 1/2"	24		
39	cb	8	BAR 6 x 4 x 0'-8 1/2"	30		
40	cc	4	BAR 2 1/4 x 4 x 1'-1 1/2"	15		
41			6.44			
42						
43						
44						
45						
46						
47			2-WHEEL SHIELD SUPPORTS-2C			
48			2-WHEEL SHIELD SUPPORTS-2D			
49	cc	2	PCS 18 x 4 x 1'-10 3/4" - BENT	56		FOR 2C
50	cd	2	PCS 18 x 4 x 1'-10 3/4" - BENT	62		FOR 2D
51	cb	8	PCS 6 x 4 x 1'-4 3/4"	60		
52	A3	16	3/8" A.S.R. BOLTS x 1 1/2" LG	3		
53	A4	16	3/8" LOCKWASHERS			
54			169			
55						
56	A21	4	PS 6 3/4 x 4 x 1'-0"	33		SHIMS
57						
58						
59			SHOP PAINT. SEE SHOP BILLS DIV. 8'1.0			
60						

REV. #	DATE	NAME	DESCRIPTION
3	6-17-71	T.W.	[illegible]
2	10-30-70	K. YOEST	C&G D LINE 22.38, ADDED 38-4
1	10-9-70	T.W.	M23 REDRAWN

SCALE 1 INCHES TO ONE FOOT

5986-3-0205

HEYL & PATTERSON, INC.
CONTRACTING ENGINEERS
PITTSBURGH, U.S.A.

ROTARY BUILDING PARTS

WHEEL SHIELDS
FOR BOARD OF WATER AND LIGHT
FIRST UNIT - DELTA STATION
LANSING, MICHIGAN

CONTRACT NO. [illegible]
DR. KEN YOEST 2-16-70
CHK. [illegible] 2-17-70
DES. [illegible] 2-17-70
APP. [illegible]

THIS DRAWING IS THE PROPERTY OF HEYL & PATTERSON, INC. AND IS FURNISHED IN CONFIDENCE FOR TEMPORARY USE AND TO BE RETURNED THEREAFTER IF REQUESTED. NOT TO BE COPIED OR DISCLOSED TO OTHERS WITHOUT THE WRITTEN CONSENT OF HEYL & PATTERSON, INC.

51-0009
D-2942

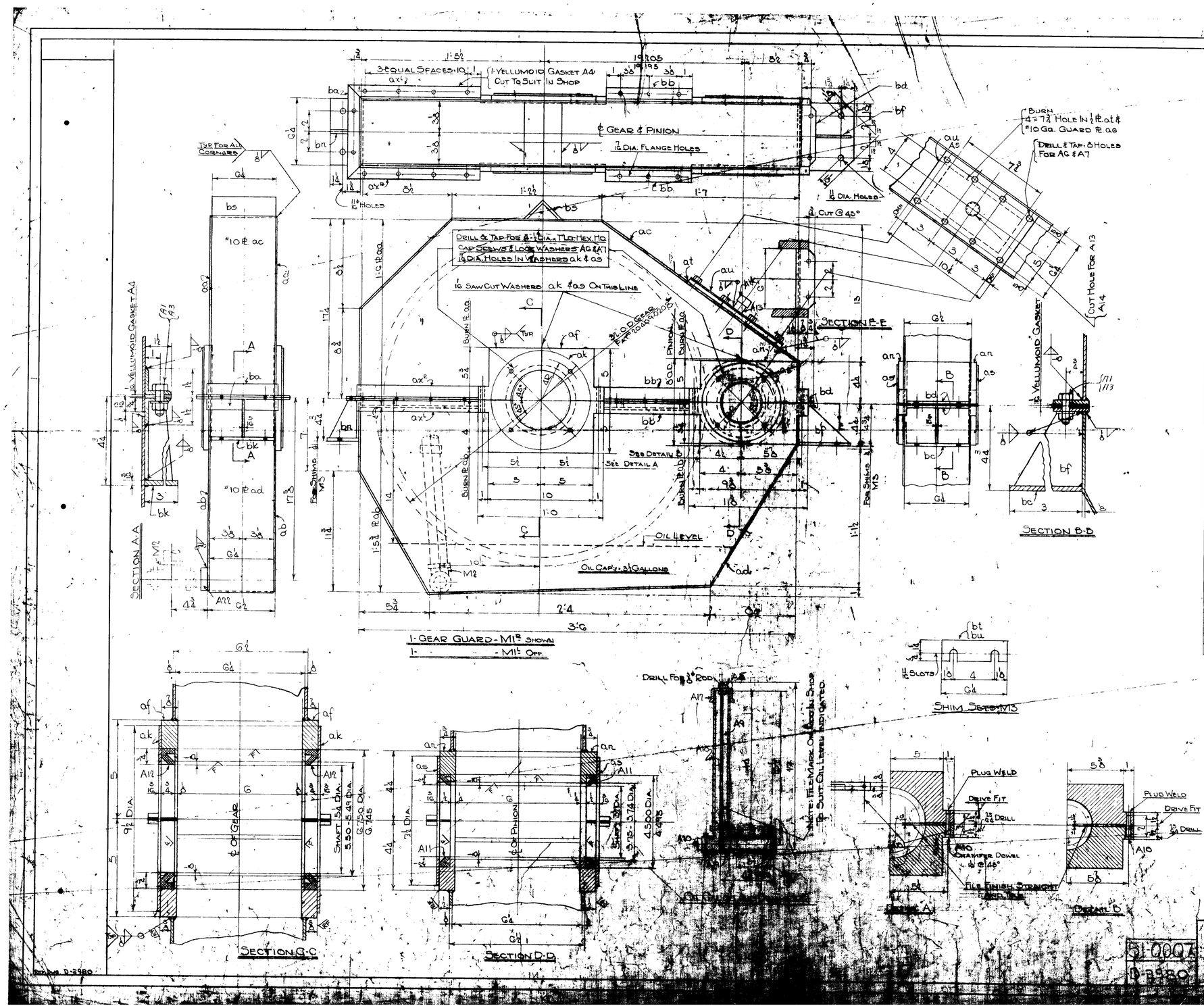

BILL OF MATERIAL

LINE	MARK	ANT.	DESCRIPTION	WT.	PER ASSY.	ITEM NO.
1			2-GEAR GUARDS-M12-WELD OIL TIGHT			
2			ASSEMBLE IN SHOP AS PER DWG. 0201			
3	aa	4	PL 18 x 10 Ga. x 3'-6	118		5
4	ab	4	PL 17 3/8 x 10 Ga. x 3'-6	118		5
5	ac	2	PL 6 1/4 x 10 Ga. x 5'-3 (BENT)	30		5
6	ad	2	PL 6 1/4 x 10 Ga. x 5'-6 3/8 (BENT)	33		5
7	af	4	BARS 10 x 1 x 1'-10 (FIN. TO 8" x 3/8 x 1'-10)	136		5
8	ak	4	SPLIT WASHER 9 1/2 O.D. x 5 1/2 I.D. x 7/16 THK	20		
9			MAKE FROM PL 9 3/8 x 7/16 x 0'-9 3/8			
10	an	4	BARS 8 1/2 x 3/8 x 0'-11 3/8 (CUT TO) (FIN. TO 8 1/2 x 3/8 x 0'-11 3/8)	90		5
11	as	4	SPLIT WASHERS 7 1/2 O.D. x 3 3/4 I.D. x 7/16 THK	12		5
12			MAKE FROM PL 7 3/8 x 7/16 x 0'-9 3/8			
13	at	2	PL 6 1/4 x 2 x 0'-10 1/4	19		29-5
14	au	2	PL 6 1/4 x 1/4 x 0'-10 1/4	10		5
15	ax	8	L 1 1/2 x 1 1/2 x 7/16 x 1'-1	14		5
16	ba	4	L 1 1/2 x 1 1/2 x 7/16 x 0'-9 1/2	6		5
17	bb	8	L 1 1/2 x 1 1/2 x 7/16 x 0'-8 1/4	10		5
18	bc	2	BARS 5 x 5/8 x 0'-6 1/4	6		5
19	bd	4	BARS 1 3/4 x 1/4 x 0'-6	3		5
20	bf	2	BARS 2 1/2 x 5/8 x 0'-4 1/8	3		5
21	bk	2	BARS 3 x 7/16 x 0'-6 1/4	3		5
22	bn	2	BARS 2 1/2 x 7/16 x 0'-3 3/8	2		5
23	bs	2	L 2 1/2 x 2 1/2 x 1/4 x 0'-6 1/4	4		5
24	A1	36	3/8" x 1 1/4 LG A S R BOLTS			
25	A10	16	3/8" x 2 LG DOWEL PINS-TG			
26	A3	16	3/8" LOCK WASHERS			
27	A4	2	YELLUMOID GASKET 1/16" x [illegible] x 4 0'-6			
28	A5	2	" " " 1/16" x [illegible] x 4 0'-6			
29	A6	48	5/8" AR S HEXS, HEX HD. x 1 1/4			
30	A7	48	5/8" LOCK WASHERS			
31	A11	4	GARLOCK GASKET [illegible]			
32	A12	4	" " " [illegible]			
33	A13	2	1 DIA x 2 1/2 LG PIPE NIPPLE			
34	A14	2	1 DIA PIPE CAP			
35	A22	2	1 1/4 DIA PIPE COUPLINGS [illegible]			
36						
37						
38			2 OIL CHANGE & DRAINS-M12			
39			ASSEMBLE IN SHOP AS PER DWG. 0201			
40	A8	4	3/8" HEX. NUTS			
41	A9	2	3/8 DIA. BOLT x 1 1/2 LG.			
42	A17	2	1 1/4 DIA. STD. PIPE CAP			
43	A18	2	PES. 1 1/4 DIA. STD. PIPE x 1 1/2 T.R.E.			
44	A19	2	1 1/4 DIA. PIPE TEES			
45	A20	2	1 1/4 DIA. PIPE PLUGS			
46	A21	2	1 1/4 DIA. STD. PIPE x 0'-3 1/2 T.R.E.			
47						
48			4 SHIMS SETS M13			
49			ASSEMBLE IN SHOP AS PER DWG. 0201			
50	bt	8	BARS 1/4 x #10 x 0'-6 1/4	3		5
51	bu	8	BARS 2 x #10 x 0'-6 1/4	2		5
52		1	QT. #97G OIL PROOF COATING RED			
53		7	GAL. OF GULF LUBRICANT EP95			
54						
55						
56			SHOP PAINT SEE B/M 8701			

NOTES:
HOLES AS NOTED

4348 15B-34

J.A.B. 10-29-71

REV. #	DATE	NAME	DESCRIPTION

SCALE 3-1/2-6 INCHES TO ONE FOOT

5986-3-0206

HEYL & PATTERSON, INC.
CONTRACTING ENGINEERS
PITTSBURGH, U.S.A.

ROTARY RAILROAD CAR DUMPER
DETAILS OF REAR GUARD

FOR BOARD OF WATER & LIGHTS
FIRST UNITS DELTA STATION
LANSING, MICHIGAN

CONTRACT NO.
SCALE 3-1/2=1'-0" DATE
TRACED
CHECKED J. FEUERBACH
APPROVED J. A. BAUER

THIS DRAWING IS THE PROPERTY OF HEYL & PATTERSON, INC. AND IS FURNISHED IN CONFIDENCE FOR TEMPORARY USE AND TO BE RETURNED THEREUPON. IT IS NOT TO BE REPRODUCED, NOR TO BE SHOWN TO ANYONE WITHOUT WRITTEN PERMISSION.

D-2980

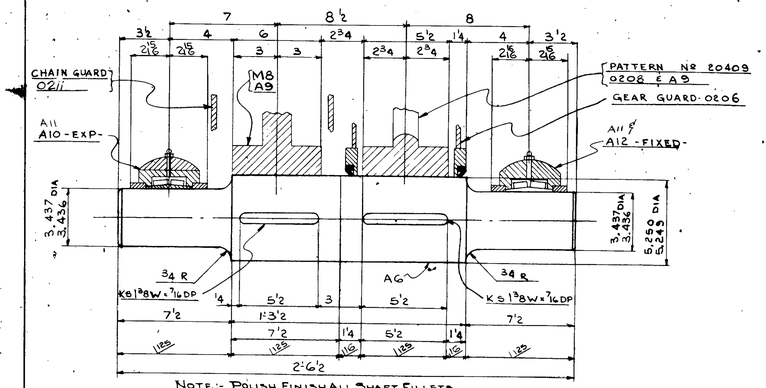

NOTE:- POLISH FINISH ALL SHAFT FILLETS
2 - INTERMEDIATE SHAFTS - M2

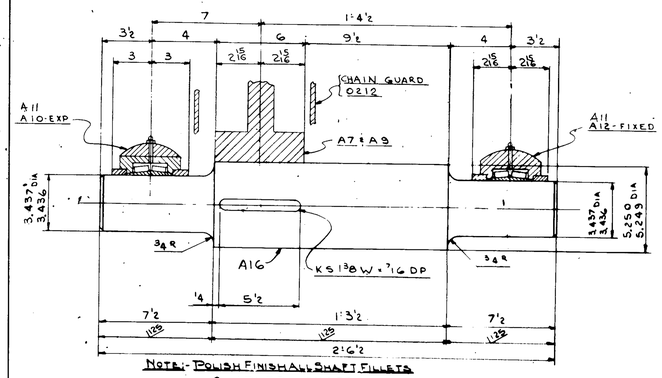

NOTE:- POLISH FINISH ALL SHAFT FILLETS
2 - IDLER SHAFTS - M4

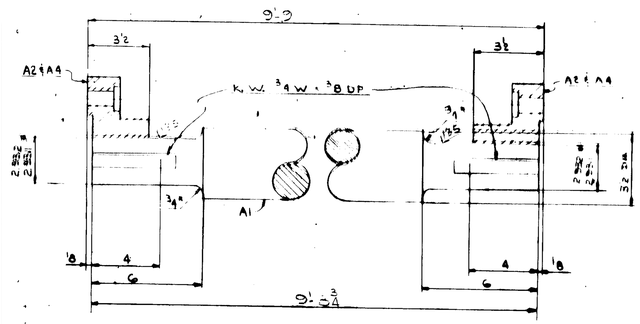

2 - LINE SHAFTS - M1
(T & P STL)

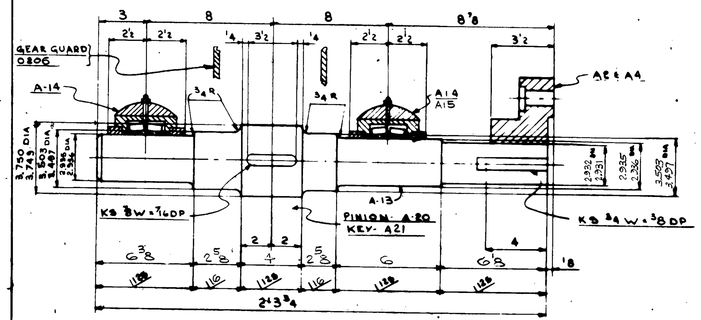

NOTE:- POLISH FINISH ALL SHAFT FILLETS
2 - PINION SHAFT - M3

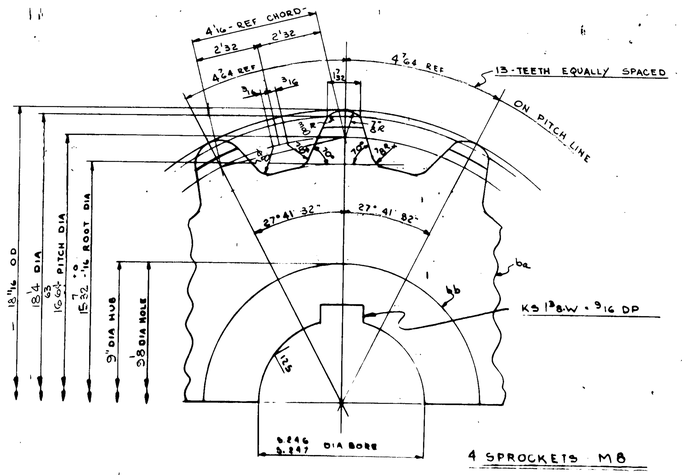

4 SPROCKETS M8

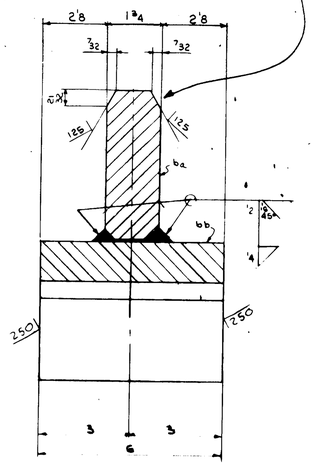

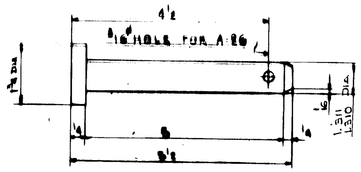

4 - CHAIN PINS - A-25

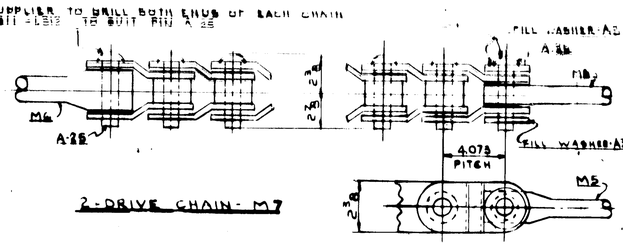

2 - DRIVE CHAIN - M7

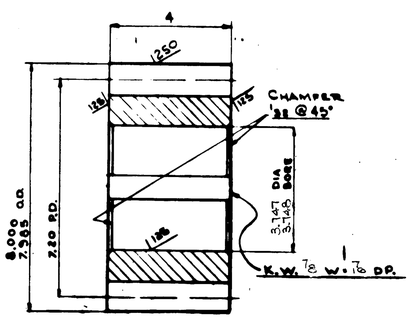

2 - DRIVE PINIONS - A-20

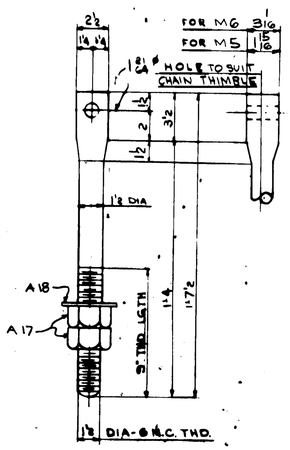

2 - CHAIN ANCHORS - M8
2 - CHAIN ANCHORS - M6

PRE-HEAT BEFORE FLAME CUTTING TEETH, MACHINE SIDES OF TEETH GRIND BEARING SURFACES OF TEETH SMOOTH FLAME HARDEN TEETH TO 350-400 B.H.N.

BILL OF MATERIAL

LINE	MARK	NO. PCS	DESCRIPTION	WEIGHT	REQ. BY SHOP
1			ASSEMBLE FOLLOWING IN SHOP AS PER 0201		
2			2 - LINE SHAFTS - M1		Yes
3	A1	2	SHAFTS 5 1/2" x 3 - 3 3/4 LG (C 1045 T & P STL)	909	
4	A2	2	COUPLINGS - FALK 30G82 - MADE UP OF	148	
5			2 - RIGID HALVES - PLAIN FACE FLG. COMP.	2.472#	
6			WITH BOLTS - BOTH HUBS BORED	2.922	
7			K.S. 3/4 W x 3/8 DP. FOR ST. KEY		
8	A4	4	ST. KEYS 3/4 x 3/4 x 4" LG.	2	Yes
9			P.D. 3 PRINTS FOR H & P APPROVAL &		
10			1 - REP AFTER APPROVAL OF A2		
11					
12			2 - INTERMEDIATE SHAFTS - M2		Yes
13	A6	2	SHAFTS 5 1/2" x 2'-6 1/2 LG. (R.WT. = 404#)	264	S
14			C - 1045 H - R - STEEL		
15	PAT. 20409	2	CUT SPUR GEARS - DWG. 0208		
16			C-4140 CAST STL. 31.2 P.D. - 78T - 2 1/2 D.P. - 4"	600	
17			FACE - 20° INV. STD. FULL DEPTH TEETH - CUT		
18			1/2 A.G.M.A. BACKLASH INTO GEAR - HUB 6 1/4"		
19			x 2 3/8 R.F. x 2 3/8 R.F. - BORE 5.248 - 5.247 KS 1 3/8 W x 3/8 DP		
20			FOR ST. KEY - HEAT TREAT BEFORE MACH.		
21			FIN. TOOTH HARDNESS 280-310 BHN. SAND		
22			BLAST AFTER HEAT TREAT (R. WT. = 940#)		
23	A9	4	ST. KEYS 1 3/4 x 1 x 5 1/2 LG - RD. 2 ENDS	8	Yes
24					
25			P.D. - 3 PRINTS FOR H & P APPROVAL & 1 - REPROD.		
26			AFTER APPROVAL OF A10 & A12		
27	A10	2	DODGE - SPHER - ALIGN PILLOW BLOCKS	140	Yes
28			FOR 3 7/16" SHAFT 4 - BOLT BASE		
29			EXP - TYPE		
30	A12	2	DODGE - SPHER - ALIGN PILLOW BLOCKS	140	
31			FOR 3 7/16" SHAFT 4 - BOLT BASE		
32			FIXED TYPE		
33	M8	2	SPROCKETS FOR REX OR EQUAL	300	
34			CHAIN Nº RX 1245 - PITCH 4.075 -		
35			16 53/64 P.D. - 13 TEETH FLAME		
36			HARDEN TEETH 350 - 400 B.H.N.		
37			MAKE FROM 2 PCS. 19 1/4 x 1 3/4 x 1'-7 1/2 C-1045 STL.		S
38			2 PCS. HEAVY WALL STL. TUBING		
39			9" O.D. x 4" I.D. x 6" LG.		
40			2 1/2 THK. WALL - SAW CUT FROM STOCK		
41	A11	4	1/4" x 4" BUTTON HD. GREASE FITTINGS		
42			2 - PINION SHAFT - M3		
43	A13	2	SHAFT 4" x 2'-3 3/4 LG. R.W. = 200#	123	S
44			C - 1045 H.R. STEEL		
45	A2	1	COUPLING	74	
46	A4	2	KEY		
47	A14	4	DODGE - SPHER - ALIGN PILLOW BLOCKS		
48			FOR 2 15/16" SHAFT 4 - BOLT BASE		
49			EXP - TYPE		
50	A20	2	CUT SPUR PINIONS 4150 FORGED	68	
51			ALLOY STEEL HEAT TREAT 320-350		
52			B.H.N. BEFORE MACH. 7.2 P.D. - 18 T -		
53			2 1/2 DP - 4" FACE - 20° INV. FULL DEPTH		
54			TEETH CUT 1/2 OF AGMA BACKLASH		
55			INTO PINION R.WT. = 72# EA.		
56	A21	2	STRAIGHT KEY 3/8 x 3/8 x 3 1/2 LG - RD 2 ENDS	2	
57	A15	4	1/4" BUTTON HD. GREASE FITTINGS		
58			2 - IDLER SHAFTS - M4		
59	A16	2	SHAFTS 5 1/2" x 2'-6 1/2 LG	264	S
60			C 1045 H R STEEL (R.W. = 404)		
61	M8	2	SPROCKETS	300	S
62	A9	2	KEYS	2	
63	A10	2	PILLOW BLOCKS - EXP	140	
64	A12	2	PILLOW BLOCKS - FIXED	140	
65	A11	4	1/4" BUTTON HD. GREASE FITTINGS		
66	M7	2	DRIVE CHAINS BEFORE EQUAL	40	
67			TO REX RX 1245 PITCH 4.075 PINS TO BE		
68			COTTERED, LGTH PER CHAIN [illegible] (APPROX.		
69			270 EXTRA ADDED) AVE. ULT. STR. 170,000#		
70			STYLE "K" TO BE HOT DIP LUBRICATED BY		
71			SUPPLIER. SUPPLIER TO DRILL BOTH END		
72			LINKS OF EACH CHAIN AS PER		
73			DWG 0207 (THIS DWG.)		
74					
75			2 - CHAIN ANCHORS - M8		
76		2	SAE 4140 FORGED STL. H.T.		NO
77			BEFORE MACH 285-321 BHN		
78	A17	4	1 1/2" HEAVY HEX NUTS		
79	A18	2	1 1/2" STD. FLAT WASHERS		
80					
81			2 - CHAIN ANCHORS - M6		
82		2	SAE 4140 FORGED STL. H.T		NO
83			BEFORE MACH 285-321 BHN		
84	A17	4	1 1/2" HEAVY HEX NUTS		
85	A18	2	1 1/2" STD FLAT WASHERS		
86			CHAIN PINS & WASHERS		
87	A25	4	BAR 1 3/4" x 6 1/2 LG SAE 4140	22	
88			H.T. 285-321 BHN.		
89					
90	A8	4	WASHERS STEEL 1 3/4 OD. x	2	S
91			1 11/32 ID x 5/16 THK		
92					
93	A26	4	COTTER PINS 1/8" x 2" LG		
94					
95					
96					
97					
98					
99					
100					

REV. #	DATE	NAME	DESCRIPTION
		HSH	15-18-35
		D.A.B.	10-29-71

THIS DRAWING IS THE PROPERTY OF HEYL & PATTERSON, INC. AND FURNISHED IN CONFIDENCE FOR TEMPORARY USE AND TO BE RETURNED THEREAFTER IF REQUESTED. NOT TO BE COPIED OR DISCLOSED TO OTHERS WITHOUT THE EXPRESS CONSENT OF HEYL & PATTERSON, INC.

5986-3-0207

HEYL & PATTERSON, INC.
CONTRACTING ENGINEERS
PITTSBURGH, U.S.A.

ROTARY RAILROAD CAR DUMPER
DETAILS OF SHAFTS, SPROCKETS, CHAIN & CHAIN ANCHORS
FOR BOARD OF WATER & LIGHT
FIRST WWP - DELTA STATION
LANSING, MICHIGAN

DIVISION OF
MADE G. DOLEI
CHECKED T. W. JONES
APPROVED
SCALE
DATE 4-15-70
4-18-70
4-21-70

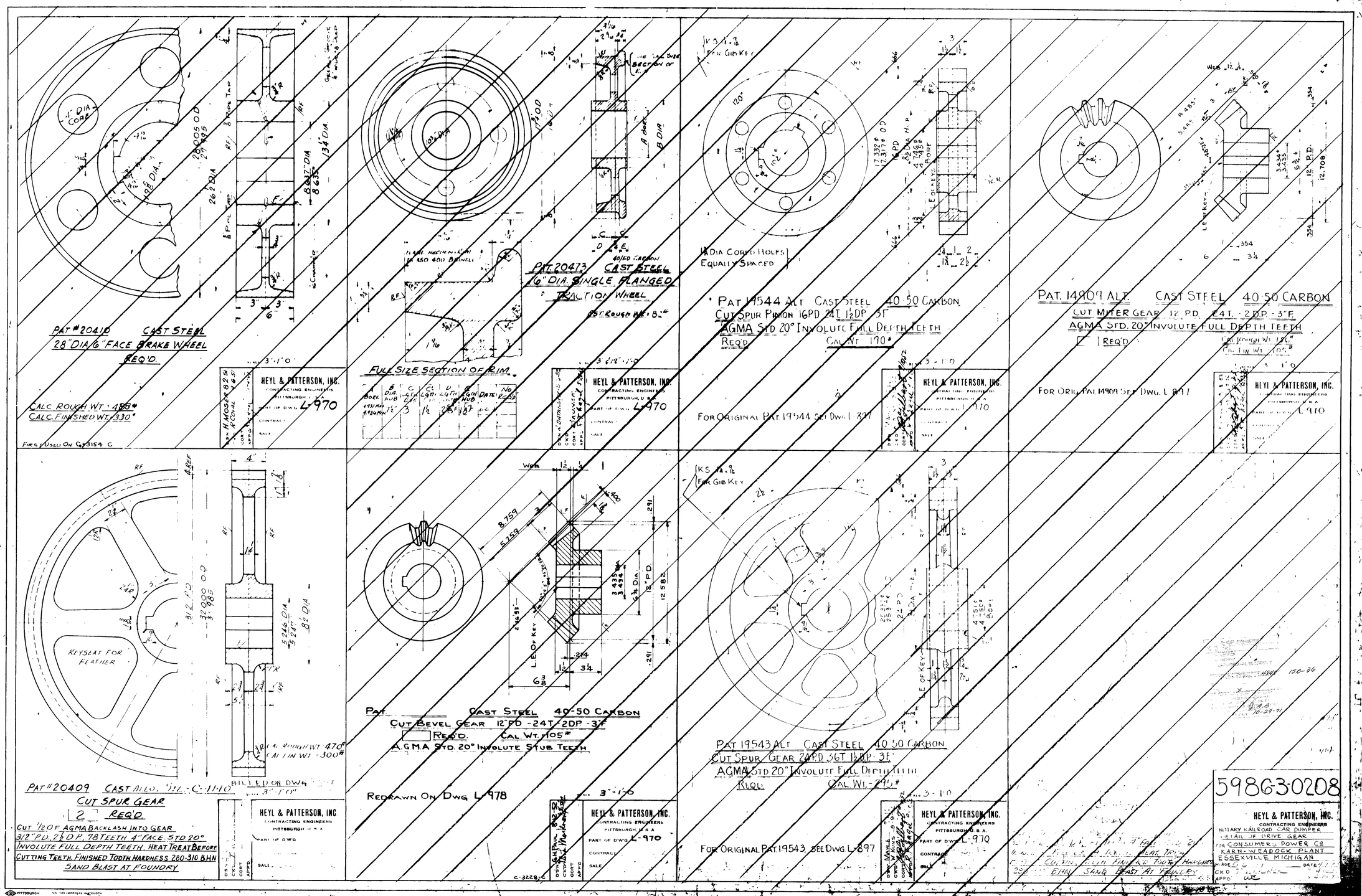
PAT #20410 CAST STEEL
28" DIA 6" FACE BRAKE WHEEL
REQ'D.
CALC ROUGH WT = 488#
CALC. FINISHED WT. 330#
FIRST USED ON G-3154 C
HEYL & PATTERSON, INC.
CONTRACTING ENGINEERS
PITTSBURGH, PA.
PART OF DWG L-970
PAT 20473 CAST STEEL
16" DIA. SINGLE FLANGED
TRACTION WHEEL
FULL SIZE SECTION OF RIM
PAT 19544 ALT CAST STEEL 40-50 CARBON
CUT SPUR PINION 16PD 24T 1½DP 3F
AGMA STD 20° INVOLUTE FULL DEPTH TEETH
REQ'D
CAL WT 190#
FOR ORIGINAL PAT 19544 SEE DWG L 897
PAT. 14909 ALT CAST STEEL 40-50 CARBON
CUT MITER GEAR 12 P.D. 24T. - 2DP - 3"F
AGMA STD. 20° INVOLUTE FULL DEPTH TEETH
REQ'D
FOR ORIG. PAT 14909 SEE DWG. L 897
PAT #20409 CAST ALLO. STL. C-1140
CUT SPUR GEAR
2 REQ'D
CUT 120 OF AGMA BACKLASH INTO GEAR
31/2" P.D. 2½ D.P. 78 TEETH 4" FACE STD 20°
INVOLUTE FULL DEPTH TEETH. HEAT TREAT BEFORE
CUTTING TEETH. FINISHED TOOTH HARDNESS 280-310 BHN
SAND BLAST AT FOUNDRY
PAT CAST STEEL 40-50 CARBON
CUT BEVEL GEAR 12" PD - 24T - 2DP - 3"F
REQ'D. CAL. WT. 405#
A.G.M.A. STD. 20° INVOLUTE STUB TEETH
REDRAWN ON DWG L 978
PAT 19543 ALT CAST STEEL 40-50 CARBON
CUT SPUR GEAR 24PD 36T 1½DP 3F
AGMA STD 20° INVOLUTE FULL DEPTH TEETH
REQ'D
CAL WT. 295#
FOR ORIGINAL PAT 19543 SEE DWG L-897
598630208
HEYL & PATTERSON, INC.
CONTRACTING ENGINEERS
ROTARY RAILROAD CAR DUMPER
DETAIL OF DRIVE GEAR
FOR CONSUMERS POWER CO
KARN-WEADOCK PLANT
ESSEXVILLE MICHIGAN

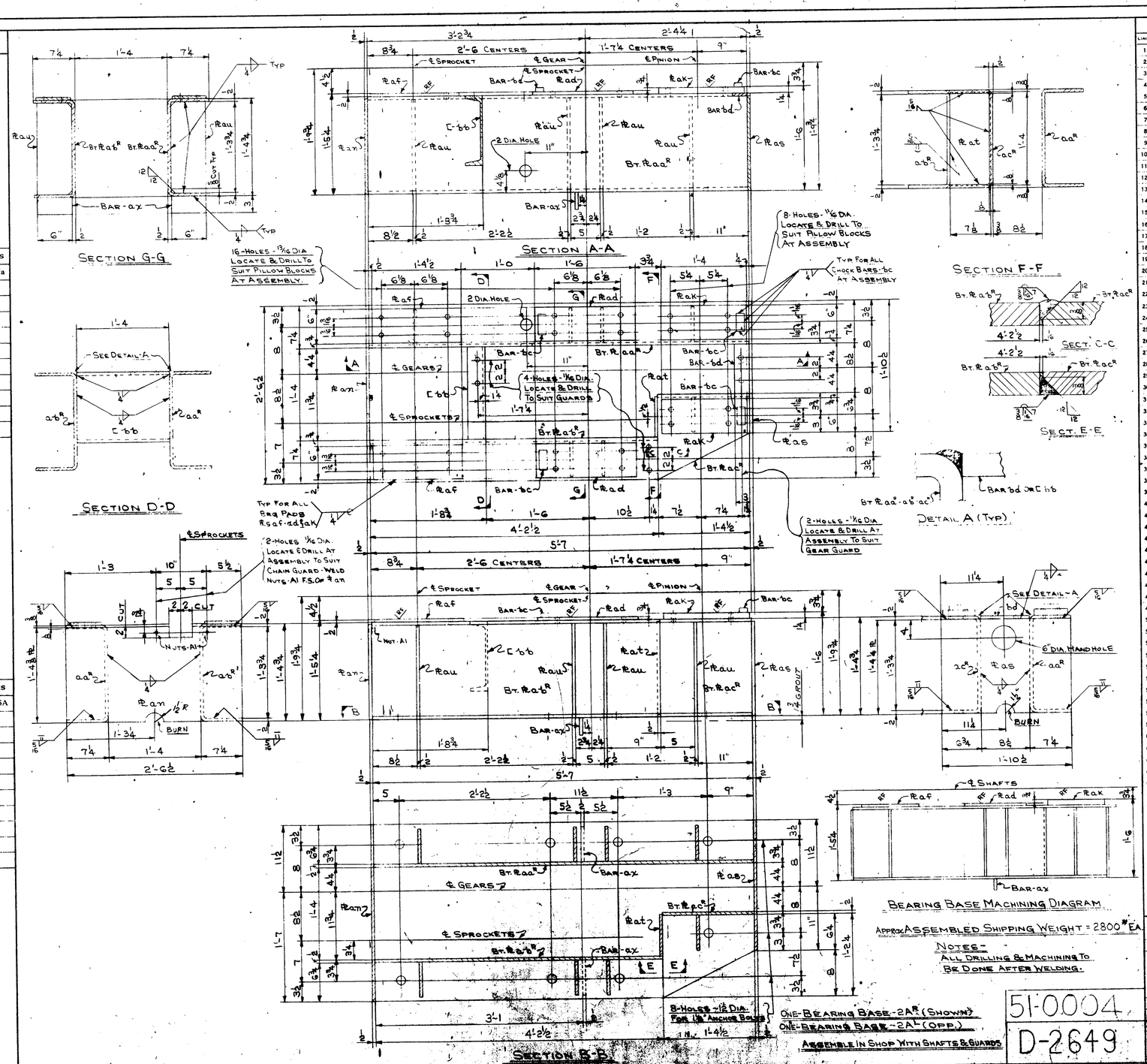

ASSEMBLY MARKS				
aa	ba	ca	da	fa
ab	bb	cb	db	
ac	bc	cc		
ad	bd			
af				
ak				
an				
as				
at				
au				
ax				

SHIPPING MARKS			
2A	3A	4A	5A
2B	3B	4B	
2C	3C		
2D			
2F			
2K			
2N			
2S			
2T			
2U			
2X			

BILL OF MATERIAL

LINE	MARK	NO. PCS.	SECTION	LENGTH		WEIGHT	REMARKS	
1								
2			2-BEARING BASES - 1-2AR & 1-2AL					
3			ASSEMBLE IN SHOP WITH SHAFTS & GUARDS					
4			AS PER GEN. DWG. 0201					
5								
6	aa R/L	2	PL 29¼ x ½	5	7	560	BENT	29-5
7	ab R/L	2	PL 29¼ x ½	4	2½	424	BENT	29-5
8	ac R/L	2	PL 16¾ x ½	3	8¼	206	BENT	29-5
9	ad	4	PL 6 x ¾	1	6	92		5
10	af	4	PL 6 x ¾	1	4½	84		5
11	ak	4	PL 6 x 1½	1	4	168		5
12	an	2	PL 16⅜ x ½	2	6½	144		29-5
13	as	2	PL 16¼ x ½	1	10½	106		29-5
14	at	2	PL 7⅛ x ½	1	4	33		5
15	au	16	PL 6 x ½	1	3¾	213		5
16	ax	4	BAR 3 x ½	0	6	10		5
17	bb	2	12 [@ 20.7#	1	4	56		5
18	bc	8	BAR 1½ x ¾	0	3	8	CHOCK BAR	5
19	bd	2	BAR 3 x ½	0	8½	7		5
20	A1	4	⅝" HEX NUTS				WELD TO R an	
21			2107#					
22								
23								
24								
25								
26								
27								
28								
29								
30								
31								
32								
33								
34								
35								
36								
37								
38								
39								
40								
41								
42								
43								
44								
45								
46								
47								
48								
49								
50								
51								
52								
53								
54								
55								
56								
57								
58								
59								
60								
61								
62								
63								
64								
65								
66								
67								
68								
69								
70								
71								
72								
73								
74								
75								

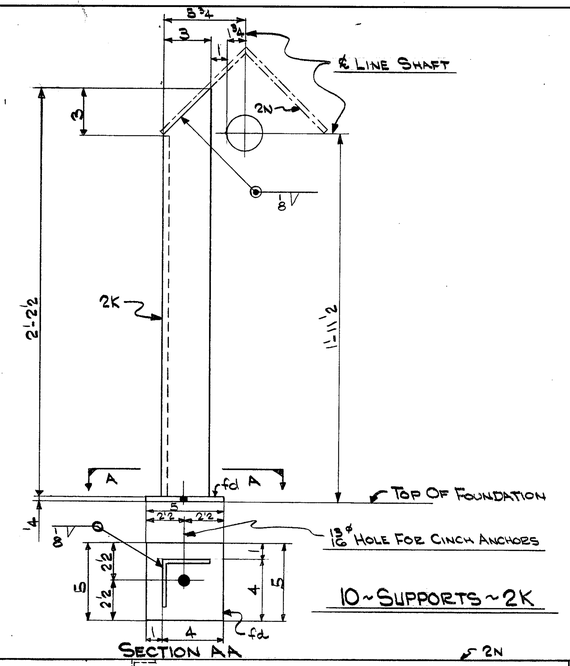

10~SUPPORTS~2K

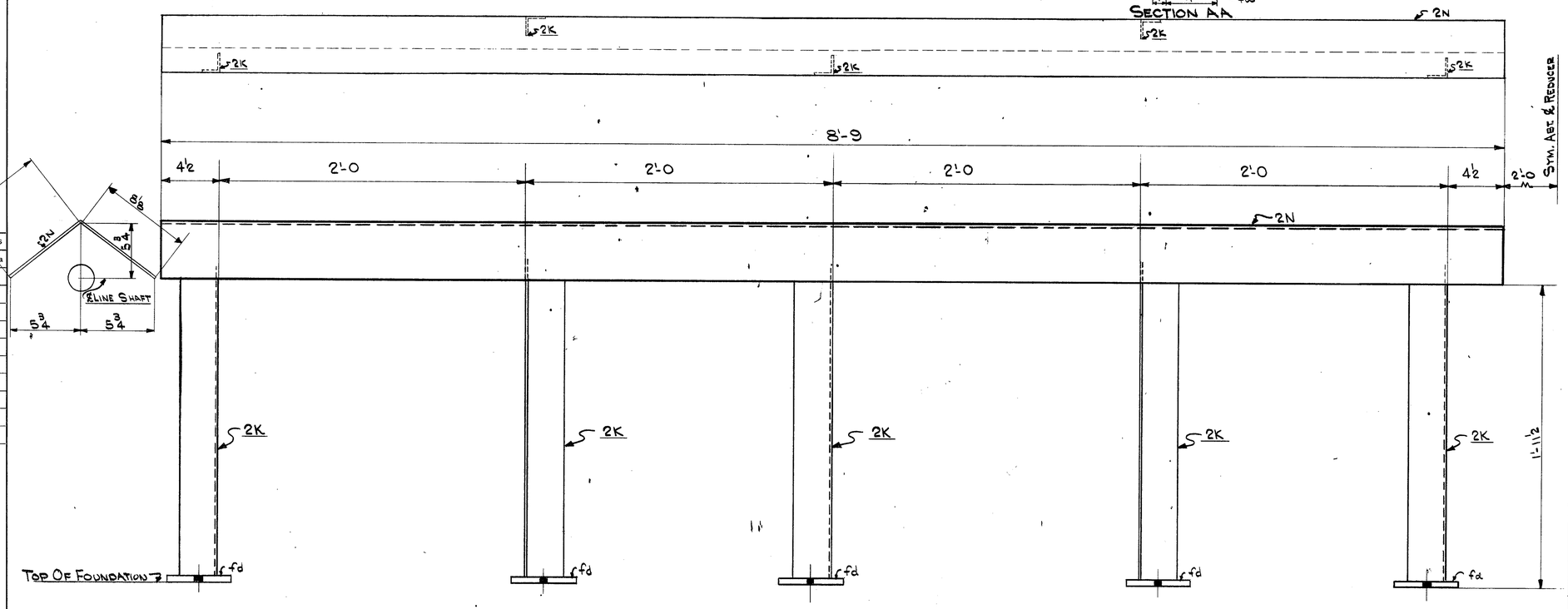

2~LINE SHAFT GUARDS~2N

SHIPPING MARKS			
2A	3A	4A	5A
2B	3B	4B	
2C	3C		
2D			
2F			
2K			
2N			
2S			
2T			
2U			
2X			

ASSEMBLY MARKS				
aa	ba	ca	da	fa
ab	bb	cb	db	
ac	bc	cc		
ad	bd			
af				
ak				
an				
as				
at				
au				
ax				

BILL OF MATERIAL

LINE	MARK	NO. PCS.	SECTION	LENGTH		WEIGHT	REMARKS	ITEM NO.	PURCH.	ACCT'G.
4			10~LINE SHAFT GUARD SUPPORTS~2K							
5			LOCATE IN FIELD							
7		10	∠s 3x3x¼	2	2½	78		S		
8	fd	10	BAR 5x¼	0	5	17		S		
			(95)							
11	2N	2	PL 16¾x10GA	8	9	124		S		
			(124)							
75			PAINT SEE DIV 87							
100			TW			219				

REV. #	DATE	NAME	DESCRIPTION

THIS DRAWING IS THE PROPERTY OF HEYL & PATTERSON, INC., AND FURNISHED IN CONFIDENCE FOR TEMPORARY USE AND TO BE RETURNED THEREAFTER IF REQUESTED. NOT TO BE COPIED OR DISCLOSED TO OTHERS WITHOUT THE EXPRESS CONSENT OF HEYL & PATTERSON, INC.

5986-3-0213

HEYL & PATTERSON, INC.
CONTRACTING ENGINEERS
PITTSBURGH, U.S.A.

ROTARY RAILROAD CAR DUMPER
DET. LINE SHAFT GUARDS

FOR BOARD OF [redacted]
FIRST UNIT [redacted]
LANSING, MICH. [redacted]

DIVISION 62
MADE G. DOLEI
CHECKED T. WIGINES
APPROVED WEF

SCALE
DATE 8-21-70
8-21-70
8-21-70

4848 ISB-R1

J.A.B. 10-29-71

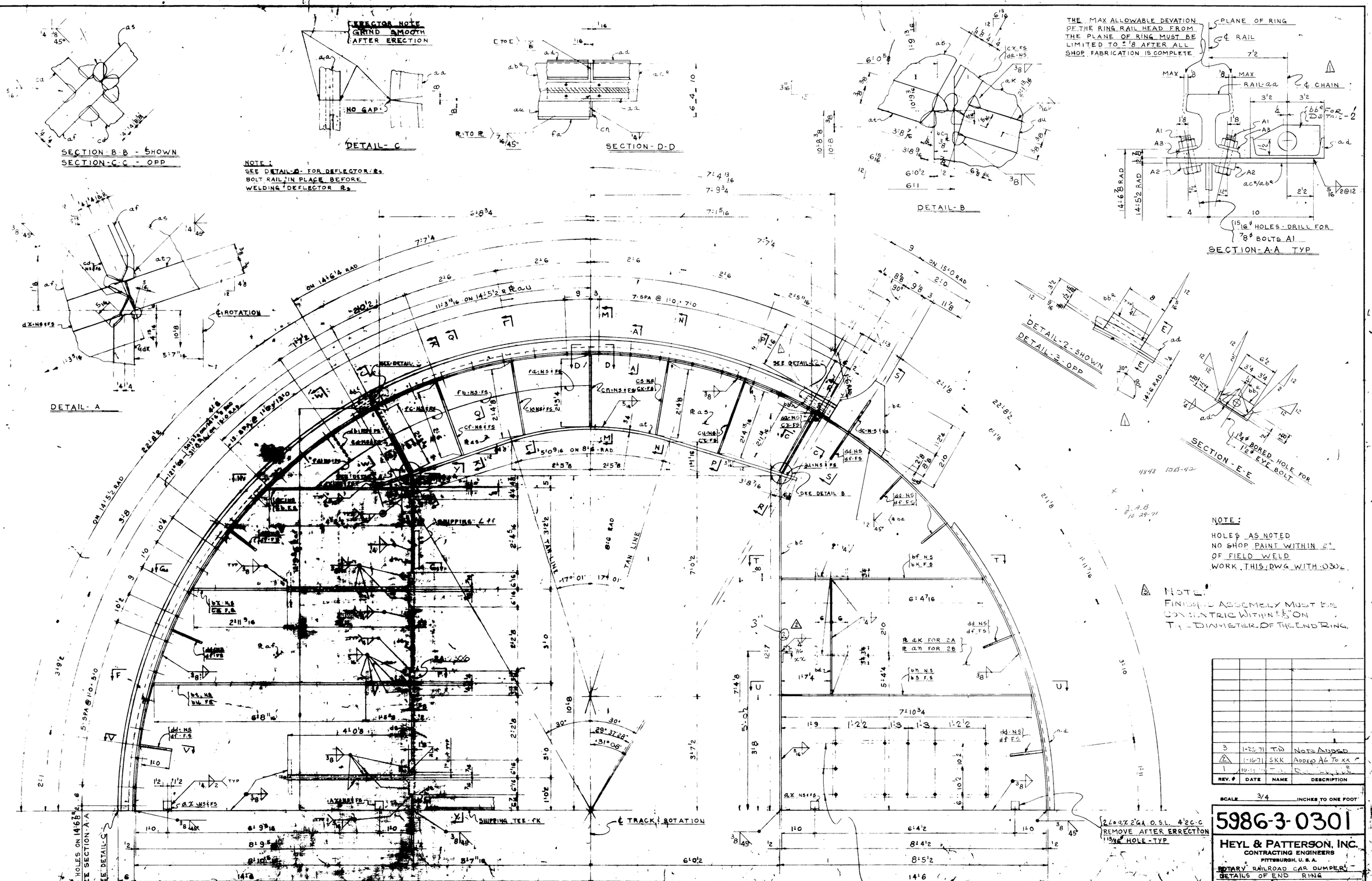
SECTION-B-B - SHOWN
SECTION-C-C - OPP
ERECTOR NOTE
GRIND SMOOTH
AFTER ERECTION
NO GAP
DETAIL-C
NOTE:
SEE DETAIL-B- FOR DEFLECTOR Rs
BOLT RAIL IN PLACE BEFORE
WELDING DEFLECTOR Rs
SECTION-D-D
DETAIL-B
THE MAX ALLOWABLE DEVATION OF THE RING RAIL HEAD FROM THE PLANE OF RING MUST BE LIMITED TO ± 1/8 AFTER ALL SHOP FABRICATION IS COMPLETE.
PLANE OF RING
℄ RAIL
℄ CHAIN
SECTION-A-A TYP
DETAIL-A
℄ ROTATION
DETAIL-2-SHOWN
DETAIL-3-OPP
SECTION-E-E
NOTE:
HOLES AS NOTED
NO SHOP PAINT WITHIN 2"
OF FIELD WELD
WORK THIS DWG WITH 0302
NOTE:
FINISHED ASSEMBLY MUST BE
CONCENTRIC WITHIN ±1/8" ON
T1 - DIAMETER OF THE END RING.
SEE DETAIL-C
SEE DETAIL-B
SHIPPING TEE-CK
℄ TRACK ROTATION
ONE-END RING SECTION-2A - SHOWN & NOTED
ONE-END RING SECTION-2B - OPP
(TOP HALF)
5/16" HOLES IN 2A-ONLY R 2K - 12 REQ'D
FOR NAME PLATE BILLED ON B/L 8701
ADD NAME R TO END RING IN SHOP
BEFORE SHIPPING.
2L 4x3x2 GA O.S.L. 4'2 c-c
REMOVE AFTER ERRECTION
15/16" HOLE - TYP
SCALE 3/4 INCHES TO ONE FOOT
5986-3-0301
HEYL & PATTERSON, INC.
CONTRACTING ENGINEERS
PITTSBURGH, U. S. A.
ROTARY RAILROAD CAR DUMPER
DETAILS OF END RING
TOP SECTION
FOR BOARD OF WATER & LIGHT
FIRST UNIT - DELTA STATION
LANSING, MICHIGAN
CONTRACT NO.
PRO. NO.
MADE
DATE
TRACED
CHECKED T. WEIDNER
MACHINERY BILL NO.
PRINT DISTRIBUTION
REV. # DATE NAME DESCRIPTION
3 1-26-71 TJD NOTE ADDED
2 1-16-71 SKK ADDED A6 TO XX
THIS DRAWING IS THE PROPERTY OF HEYL & PATTERSON, INC., AND FURNISHED IN CONFIDENCE FOR TEMPORARY USE AND TO BE RETURNED THEREAFTER IF REQUESTED. NOT TO BE COPIED OR DISCLOSED TO OTHERS WITHOUT THE WRITTEN CONSENT OF HEYL & PATTERSON, INC.

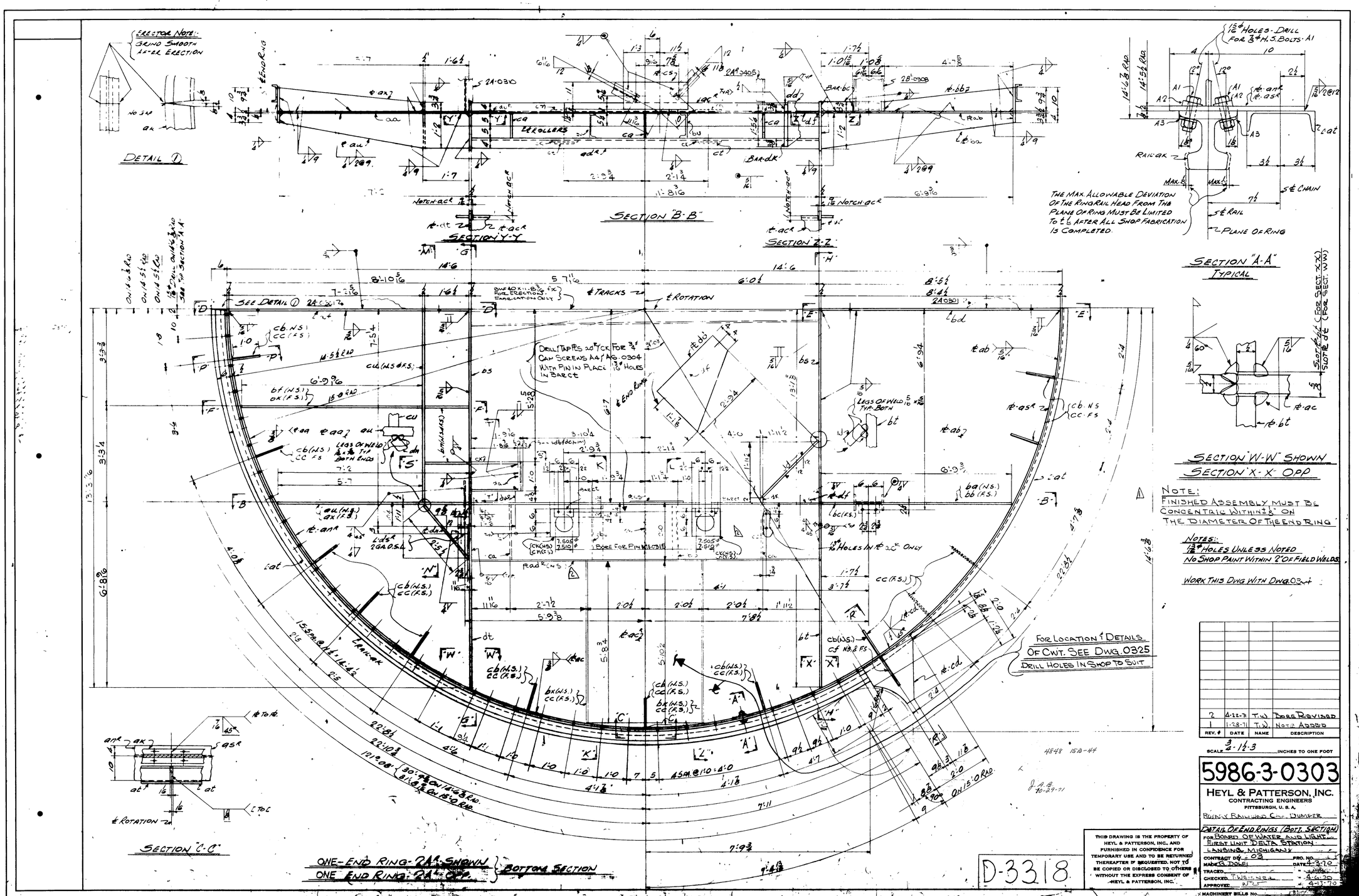
ERECTOR NOTE:
GRIND SMOOTH AFTER ERECTION
DETAIL D
SECTION "B-B"
SECTION Y-Y
SECTION Z-Z
SEE DETAIL D
℄ TRACKS
℄ ROTATION
DRILL TAPPED 20° CK FOR 3/4" CAP SCREWS AA/AG-0304 WITH PIN IN PLACE 13/16" HOLES IN BARCT
℄ END RING
℄ ROLLERS
NOTCH-ACR
SECTION "A-A" TYPICAL
THE MAX. ALLOWABLE DEVIATION OF THE RING RAIL HEAD FROM THE PLANE OF RING MUST BE LIMITED TO 1/16 AFTER ALL SHOP FABRICATION IS COMPLETED.
PLANE OF RING
SECTION "W-W" SHOWN
SECTION "X-X" OPP
SLOT FIT (FOR SECT. X-X) SLOTTED (FOR SECT. W-W)
NOTE:
FINISHED ASSEMBLY MUST BE CONCENTRIC WITHIN 1/8" ON THE DIAMETER OF THE END RING
NOTES:
13/16" HOLES UNLESS NOTED
NO SHOP PAINT WITHIN 2" OF FIELD WELDS.
WORK THIS DWG WITH DWG. 0304
FOR LOCATION & DETAILS OF CWT. SEE DWG. 0325
DRILL HOLES IN SHOP TO SUIT
SECTION "C-C"
ONE-END RING-RA-SHOWN
ONE END RING-RA-OPP.
BOTTOM SECTION
D-3318
THIS DRAWING IS THE PROPERTY OF HEYL & PATTERSON, INC. AND FURNISHED IN CONFIDENCE FOR TEMPORARY USE AND TO BE RETURNED THEREAFTER IF REQUESTED. NOT TO BE COPIED OR DISCLOSED TO OTHERS WITHOUT THE EXPRESS CONSENT OF HEYL & PATTERSON, INC.
REV. # | DATE | NAME | DESCRIPTION
2 | 4-22-71 | T.W. | BARS REVISED
1 | 1-28-71 | T.W. | NOTE ADDED
SCALE 3/4" = 1 1/2'-3" INCHES TO ONE FOOT
5986-3-0303
HEYL & PATTERSON, INC.
CONTRACTING ENGINEERS
PITTSBURGH, U. S. A.
ROTARY RAILROAD CAR DUMPER
DETAIL OF END RINGS (BOTT. SECTION)
FOR BOARD OF WATER AND LIGHT
FIRST UNIT DELTA STATION
LANSING, MICHIGAN
CONTRACT DWG. 03
PRO. NO.
NAME S. DOHEI
DATE 3-3-70
TRACED
CHECKED T.W.S. N.G.
APPROVED
MACHINERY BILLS No.
PRINT DISTRIBUTION

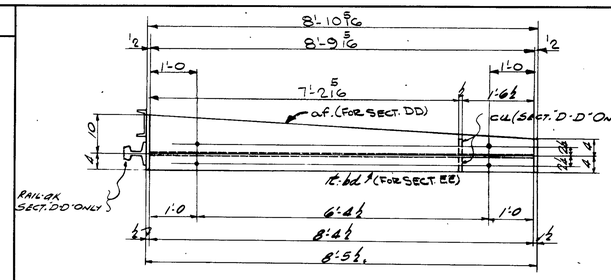

SECTION "D-D" SHOWN & NOTED
SECTION "E-E" OPP.

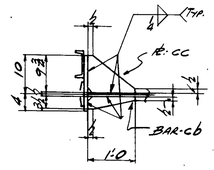

SECTION "P-P"
TYPICAL

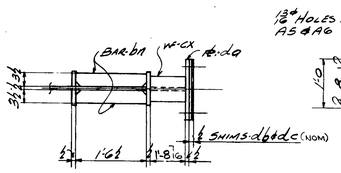

SECTION "S-S"

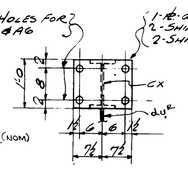

VIEW "T-T"

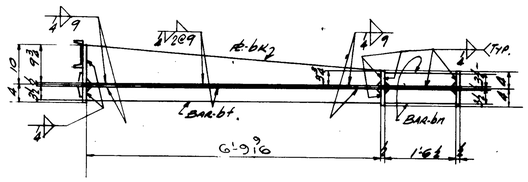

SECTION "F-F"

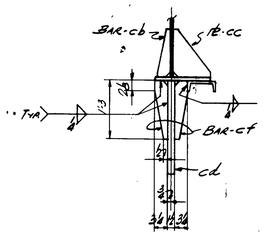

SECTION "R-R"

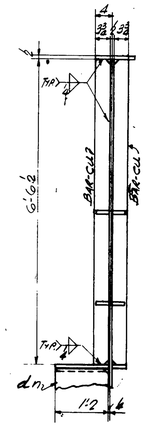

SECTION "N-N"

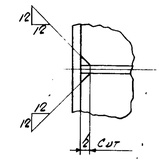

TYP. CUT ON ALL STIFFENER
PLS. & BARS TO CLEAR WELDS

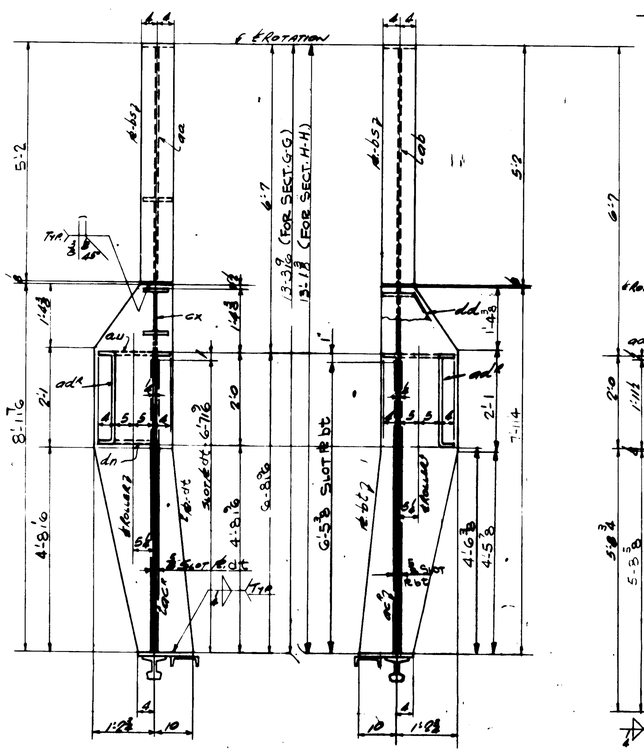

SECTION "G-G"
SECTION "H-H"

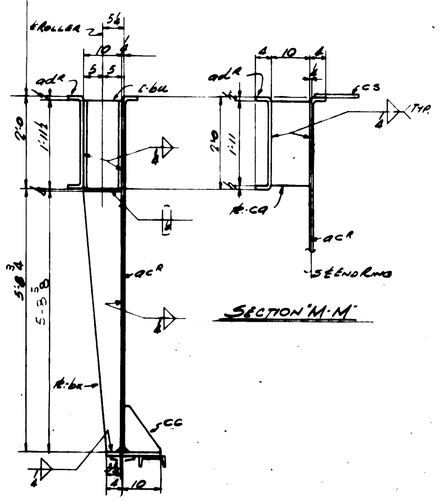

SECTION "K-K" SHOWN
SECTION "L-L" OPP.
SECTION "M-M"

NOTES:
13/16" HOLES UNLESS NOTED
NO SHOP PAINT WITHIN 2" OF FIELD WELDS.

WORK THIS DWG. WITH DWG. 0303

D-3319

ASSEMBLY MARKS				
aa	ba	ca	da	fa
ab	bb	cb	db	
ac	bc	cc		
ad	bd			
af				
ak				
am				
ap				
at				
au				
ax				

SHIPPING MARKS			
2A	3A	4A	5A
2B	3B	4B	
2C	3C		
2D			
2F			
2K			
2N			
2S			
2T			
2U			
2X			

BILL OF MATERIAL

LINE	MARK	NO. PCS.	SECTION	LENGTH	WEIGHT	REMARKS	ITEM NO.
1			2-END RINGS: 2AR				
2			ASSEMBLE IN SHOP WITH PINS M1-0315.				
3							
4	aa	2	PLS. 105 x 1/2	13 3/16	4746		25
5	ab	2	PLS. 100 1/2 x 1/2	13 0 1/2	4624		25
6	ac R	2	PLS. 97 1/2 x 1/2	11 9 7/16	3896		28
7	ad R	2	PLS. 30 x 1/2	11 8 7/16	1192	BENT	29-S
8	af	2	PLS 14 x 1/2	8 9 9/16	418		29-S
9	ak	2	175# CRANE RAILS	31 8 1/16	3700	BENT	
10	am R	2	PLS. 14 x 1/2	23 0 13/16	1110	BENT-ADD 1" FOR BENDING	27
11	as R	2	PLS. 14 x 1/2	23 0 13/16	1110	BENT-ADD 1" FOR BENDING	27
12	ac	4	7C 9.8#	23 10 3/8	934	BENT-LGTH ON 1/4" & 3/8" ENDS ADD 1'-0" FOR BENDING	29-S
13	au	2	PLS. 14 x 1/2	7 2	341	CUT FROM 1-PL 21 x 1/2 x 7'-2 1/4	29-S
14	ax	2	PLS. 9 3/4 x 1/2	5 7	185	CUT FROM 1-PL 13 3/4 x 1/2 x 5'-7 1/4	29-S
15	bq	2	PLS. 14 x 1/2	6 5 7/16	210	CUT FROM 1-PL 17 1/2 x 1/2 x 6'-5 7/16	29-S
16	bd	2	PLS. 9 3/4 x 1/2	4 7 3/8	108	CUT FROM 1-PL 12 1/2 x 1/2 x 4'-7 3/8	29-S
17	bc	2	BARS 3 1/2 x 1/2	1 0 7/16	14		3
18	bd	2	PLS. 12 x 1/2	8 4 1/2	318	CUT FROM 2-PLS 12 1/2 x 1/2 x 8'-4 1/2	29-S
19	bf	2	BARS 3 1/2 x 1/2	6 5 3/8	81		5
20	bk	2	PLS. 9 3/4 x 1/2	6 9 7/16	226	CUT FROM 1-PL 13 3/4 x 1/2 x 6'-10 1/4	29-S
21	bn	8	BARS 3 1/2 x 1/2	1 6 1/2	78		5
22	bs	4	PLS. 8 x 1/2	5 2	286		29-S
23	bt	4	PLS. 24 3/4 x 1/2	7 11 1/4	680		29-S
24	bu	4	10C 20#	1 7 1/2	157		5
25	bx	4	PLS. 10 x 1/2	5 8 3/8	198	CUT FROM 2-PLS 13 3/4 x 1/2 x 5'-8 3/8	29-S
26	cq	6	PLS. 10 x 1/2	1 11	200		29-S
27	cb	22	BARS 3 1/2 x 1/2	1 0	85		5
28	cc	30	PLS. 9 3/4 x 1/2	1 0	277	CUT FROM 1-PL 13 3/4 x 1/2 x 1'-0	29-S
29	cd	2	PLS. 24 x 1/2	2 0	385	CUT FROM 1-PL 24 x 1/2 x 3'-1 1/2	5
30	cf	4	BARS 3 1/4 x 1/2	1 3	16	CUT FROM 2-BARS 3 1/4 x 1/2 x 1'-3	29-S
31	cx	4	PLS. 12 x 1/2	1 0	82		29-S
32	cn	4	PLS. 12 x 1/2	1 0	82		29-S
33	cs	2	PLS. 11 x 7/16	2 2 1/2	54		5
34	ct	4	BARS 3 1/2 x 3/8	0 8	21		5
35	cu	4	BARS 3 1/2 x 1/2	6 6 1/2	167		5
36	cx	2	12 WF 27#	1 8 1/16	95		10-S
37	dq	2	PLS. 12 x 1/2	1 3	52		29-S
38	db	4	SHIMS 12 x 1/4	1 3	52		5
39	dc	4	SHIMS 12 x 1/8	1 3	26		5
40	dd	2	PLS. 17 3/8 x 1/2	2 3 1/4	124	CUT FROM 1-PL 26 1/4 x 1/2 x 2'-3 1/4	29-S
41	A1	132	3/4" H.S. BOLTS	0 3			
42	A2	132	3/4" ø A.T. 1 1/8" O.D. BEV. WASHERS				
43	A3	132	3/4" ø A.T. FLAT CLIPPED WASHERS				
44	A4	8	3/4" HEX. HD. CAP SCREW	0 1 3/4			
45	A5	8	3/4" A.R.S. BOLTS	0 2			
46	A6	16	3/4" STD. LOCK WASHERS				
47	dt	2	PLS. 23 1/2 x 1/2	2 1 1/2	92	CUT FROM 1-PL 23 1/2 x 1/2 x 2'-1 1/2	29-S
48	dx	2	BARS 2 x 1	1 5 1/4	19		5
49	dn	2	PLS. 14 x 1/2	2 5 1/2	120		29-S
50	dss	2	L 3 1/2 x 3 x 3/8	0 3 3/4	5		5
51	dt	2	PLS 24 3/4 x 1/2	8 1 1/16	683		29-S
52	fx	2	8 WF 40	11 8 1/16	934	SQ. CUT BOTH ENDS	5
53	du	2	BARS 4 3/8 x 1/2	1 6	23		29-S
54							
55							
56							
57							
58							
59			SHOP PAINT SEE B/M DIV 87				
60							
61							
62			NOTE:				
63			FINISHED ASSEMBLY MUST BE CONCENTRIC				
64			WITHIN 1/8" ON THE DIAMETER OF THE END RING				
65							
66							
67							
68							
69							
70							
71							
72							
73							
74			TOTAL WT. OF RAILS = 3100 #				
75			TOTAL WT. OF STEEL = 25320 #				

4848 1518-45

J.A.B. 10-29-71

REV. #	DATE	NAME	DESCRIPTION
1	1-28-71	T.W.	NOTE ADDED

THIS DRAWING IS THE PROPERTY OF HEYL & PATTERSON, INC. AND FURNISHED IN CONFIDENCE FOR TEMPORARY USE AND TO BE RETURNED THEREAFTER IF REQUESTED. NOT TO BE COPIED OR DISCLOSED TO OTHERS WITHOUT THE EXPRESS CONSENT OF HEYL & PATTERSON, INC.

5986-3-0304

HEYL & PATTERSON, INC.
CONTRACTING ENGINEERS
PITTSBURGH, U.S.A.

ROTARY RAILROAD CAR DUMPER

DETAILS OF END RINGS (BOTH SECTIONS)
FOR SOLVED OR WATER / LIGHT
FIRST UNIT - DELTA STATION
LANSING, MICHIGAN

DIVISION 03
MADE S. DOLFI
CHECKED T. WEINER
APPROVED

SCALE 1/2" = 1'-0"
DATE 4-23-70
4-4-70
3-19-75

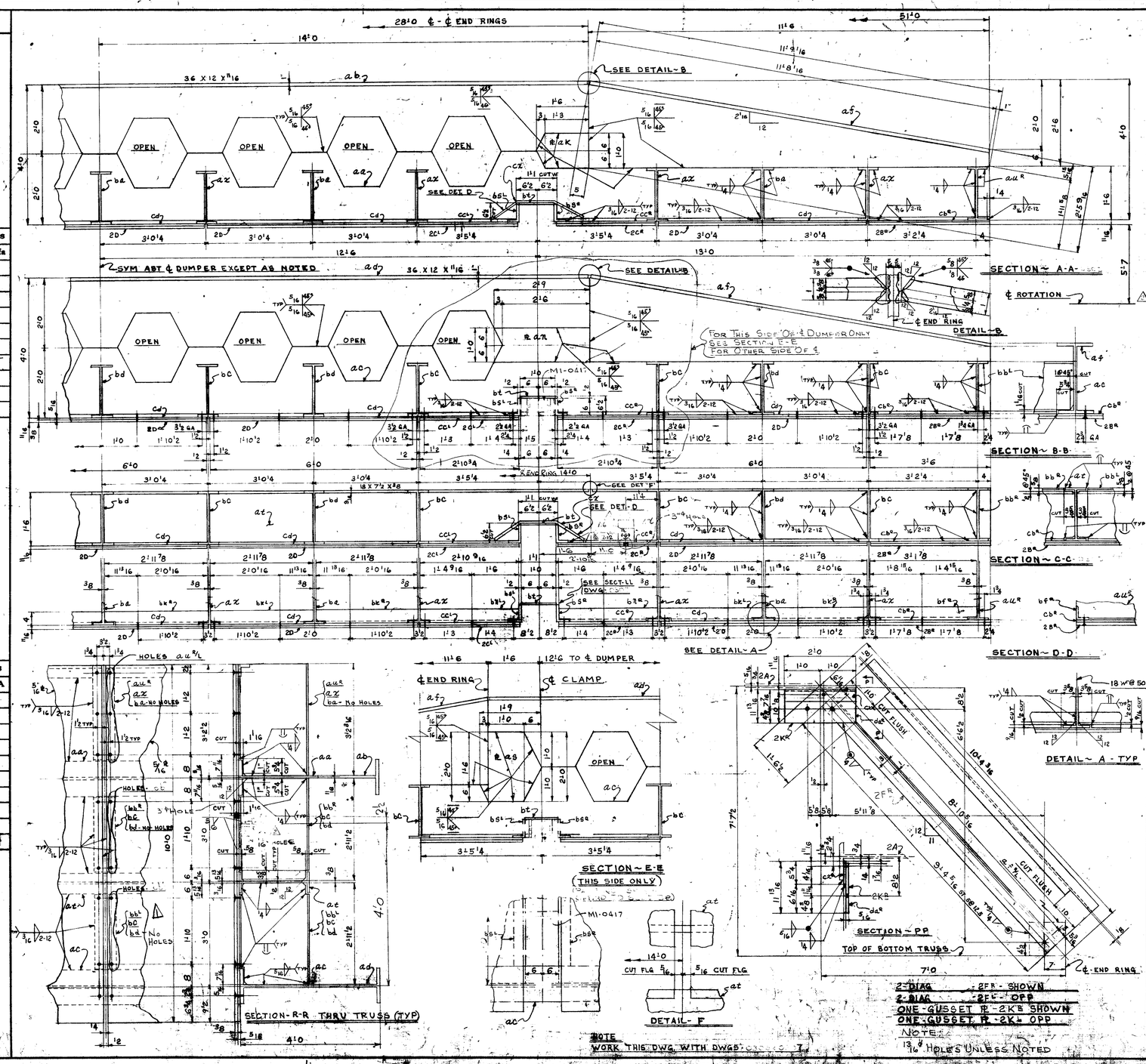

ASSEMBLY MARKS

aa	ab	ac	da	fa
ab	bb	cb	db	
ac	bc	cc		
ad	bd			
AE				
AF				
AG				
AH				
AK				
AL				
AM				
AN				

SHIPPING MARKS

3A	3A	4A	5A
3B	3B	4B	
3C	3C		
3D			
3F			
3K			
3M			
3S			
3T			
3U			
3X			

BILL OF MATERIAL

LINE	MARK	NO. REQ.	SECTION	LENGTH		WEIGHT	REMARKS	ITEM
1			ONE-SPILL TRUSS-2A				ASSEMBLED IN SHOP WITH WEARS & ASSEMBLED IN SHOP WITH WEARS & ASSEMBLED IN SHOP WITH WEARS &	
2	aa	1	TEE 12 X 24	51	0	8160	CUT FROM WF 36@160	5
3	ab	1	TEE 12 X 24	28	0	4480	CUT FROM WF 36@160	5
4	ac	1	TEE 12 X 24	51	0		REMAINDER OF aa	5
5	ad	1	TEE 12 X 24	28	0		REMAINDER OF ab	6
6	af	4	TEEs 12 X 29¼	11	9/16	4000	CUT FROM WF 36@160	6
7	ak	2	PL 12 X 5/8	1	6	78		5
8	an	1	PL 12 X 5/8	2	9	71		5
9	as	1	PL 21 X 5/8	2	0	90		5
10	at	1	WF 18 @ 50	51	0	2550		9-5
11	au	2	WF 18 @ 50	3	2 3/16	330		9-5
12	az	8	WF 18 @ 50	3	2 3/16	1320		9-5
13	ba	5	WF 18 @ 50	3	2 3/16	825		9-5
14	bb	4	WF 18 @ 50	2	11½	600		9-5
15	bc	16	WF 18 @ 50	2	11½	2400		9-5
16	bd	10	WF 18 @ 50	2	11½	1500		9-5
17	bf	2	Ls 4 X 4 X 3/4	3	1/8	112		5
18	bk	10	Ls 4 X 4 X 3/4	2	11/8	540		5
19	bl	4	Ls 4 X 4 X 3/4	2	10½	200		5
20	bs	4	Ls 4 X 6 X 1/2	9	2 3/16	588		5
21	bt	2	PL 12 X 1/2	9	2 3/16	368		29-5
22	XX							5
23	AG	2	1/4 HALF					
24								
25	cb	2	PL 42 X 5/16	10	0	930		5
26	cc	4	PL 34¾ X 5/16	10	0	1520		5
27	cd	5	PL 72 X 5/16	10	0	4000		5
28	CX	8	BARS 5 X 1	2	10½	496		5
29								
30	2B	2	PL 42 X 3/8	10	0	1100	A.R.S WEAR PL	1-5
31	2C	4	PL 34¾ X 3/8	10	0	1800	A.R.S WEAR PL ASSEMBLE IN SHOP WITH SPILL TRUSS-2A	1-5
32	2D	5	PL 72 X 3/8	10	0	4750	A.R.S WEAR PL	5-5
33								
34								
35	2F	4	BT 5 WF @ 12.5	9	4 5/16	460	DIAGIONALS	5
36			2-GUSSET PL 2K					
37	da	2	PL 11 9/16 X 1/2	2	0	82	GUSSET PL	2-5
38	CX	2	PL 5¾ X 5/16	2	0	24		5
39								
40			ONE-POST-2N					
41	CF	1	WF 12 @ 27	7	6⅞	205		15
42	CK	1	PL 23⅞ X	2	2¼	52		5
43	CR	2	PL 9⅞ X	0	11 11/16	20		5
44	CG	1	BAR 5 X 3/8	0	9½	6		5
45			283					
46								
47			2-CLAMP TROUGHS-2B					
48	CT	4	Ls 4 X 6 X 1/2	3	0	192		5
49	CU	2	PL 12 X 1/2	3	0	126		29-5
50	da	2	PL 9 X 3/8	3	0	72		5
51			390					
52								
53								
54								
55								
56								
57								
58								
59								
60			SHOP BOLTS					
61		216	3/4" SLOTTED FL HD BOLTS	0	2¼			
62		254	3/4" LOCKWASHERS					
63		254	3/4" HEX NUTS					
64		36	3/4" SLOTTED FL HD BOLTS	0	2¾			
65								
66								
67								
68								
69								
70								
71			PAINT B/M DIV 87					
72								
73								
74								
75				T/WT				

REV. #	DATE	NAME	DESCRIPTION
1	1-7-9		
2	9-1-9		

THIS DRAWING IS THE PROPERTY OF HEYL & PATTERSON, INC. AND FURNISHED IN CONFIDENCE FOR TEMPORARY USE AND TO BE RETURNED THEREAFTER IF REQUESTED. NOT TO BE COPIED OR DISCLOSED TO OTHERS WITHOUT THE EXPRESS CONSENT OF HEYL & PATTERSON, INC.

HEYL & PATTERSON, INC.

CONTRACTING ENGINEERS
PITTSBURGH, U.S.A.

ROTARY RAILROAD CAR DUMPER
DETAILS OF SPILL TRUSS

FOR

DIVISION 105
MADE
CHECKED
APPROVED

D55-306

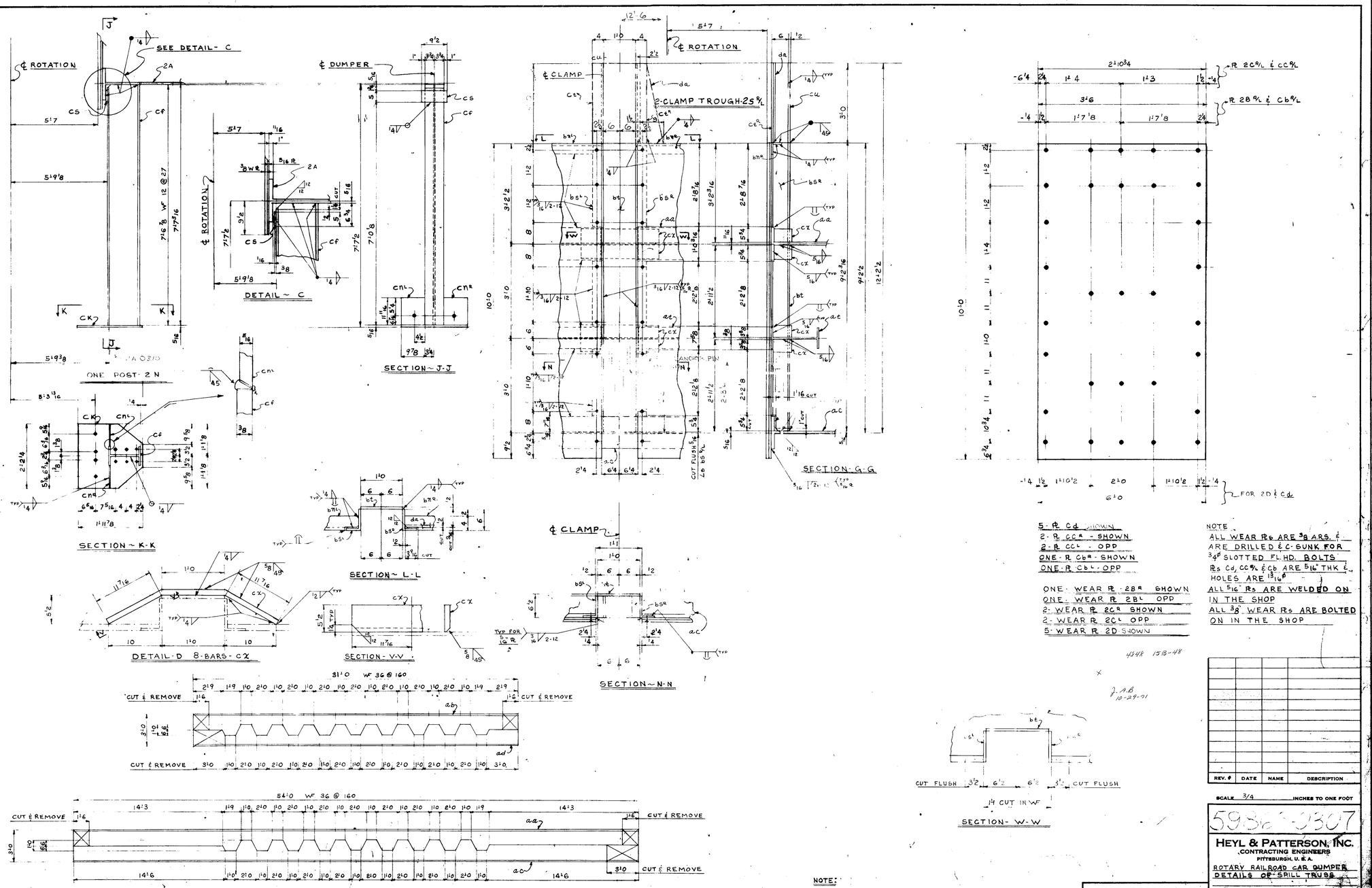
SEE DETAIL- C
℄ ROTATION
℄ DUMPER
℄ CLAMP
℄ CLAMP TROUGH-25 #/L
ONE POST- 2 N
DETAIL ~ C
SECTION ~ J-J
SECTION ~ K-K
SECTION ~ L-L
SECTION ~ G-G
SECTION ~ N-N
DETAIL-D 8-BARS-CX
SECTION-V-V
SECTION- W-W
ANCHOR PIN
CUT FLUSH
CUT & REMOVE
SKETCH FOR CUTTING TEE'S FROM BEAM (36 @ 160)
5-R Cd SHOWN
2-R CCR - SHOWN
2-R CCL - OPP
ONE-R CbR - SHOWN
ONE-R CbL - OPP
ONE-WEAR R 2BR SHOWN
ONE-WEAR R 2BL OPP
2-WEAR R 2CR SHOWN
2-WEAR R 2CL OPP
5-WEAR R 2D SHOWN
NOTE
ALL WEAR Rs ARE 3/8 ARS. & ARE DRILLED & C-SUNK FOR 3/4" SLOTTED FL.HD. BOLTS
Rs Cd, CC 9/L & Cb ARE 5/16" THK & HOLES ARE 13/16"
ALL 5/16" Rs ARE WELDED ON IN THE SHOP
ALL 3/8" WEAR Rs ARE BOLTED ON IN THE SHOP
NOTE:
WORK THIS DWG WITH 13/16" HOLES UNLESS NOTED
NO SHOP PAINT WITHIN 2" OF FIELD WELD
THIS DRAWING IS THE PROPERTY OF HEYL & PATTERSON, INC., AND FURNISHED IN CONFIDENCE FOR TEMPORARY USE AND TO BE RETURNED THEREAFTER IF REQUESTED. NOT TO BE COPIED OR DISCLOSED TO OTHERS WITHOUT THE EXPRESS CONSENT OF HEYL & PATTERSON, INC.
REV. # | DATE | NAME | DESCRIPTION
SCALE 3/4 INCHES TO ONE FOOT
5936-0307
HEYL & PATTERSON, INC.
CONTRACTING ENGINEERS
PITTSBURGH, U.S.A.
ROTARY RAILROAD CAR DUMPER
DETAILS OF SPILL TRUSS
FOR
CONTRACT DIV.
MADE
TRACED
CHECKED
APPROVED
MACHINERY BILLS No.
PRINT DISTRIBUTION

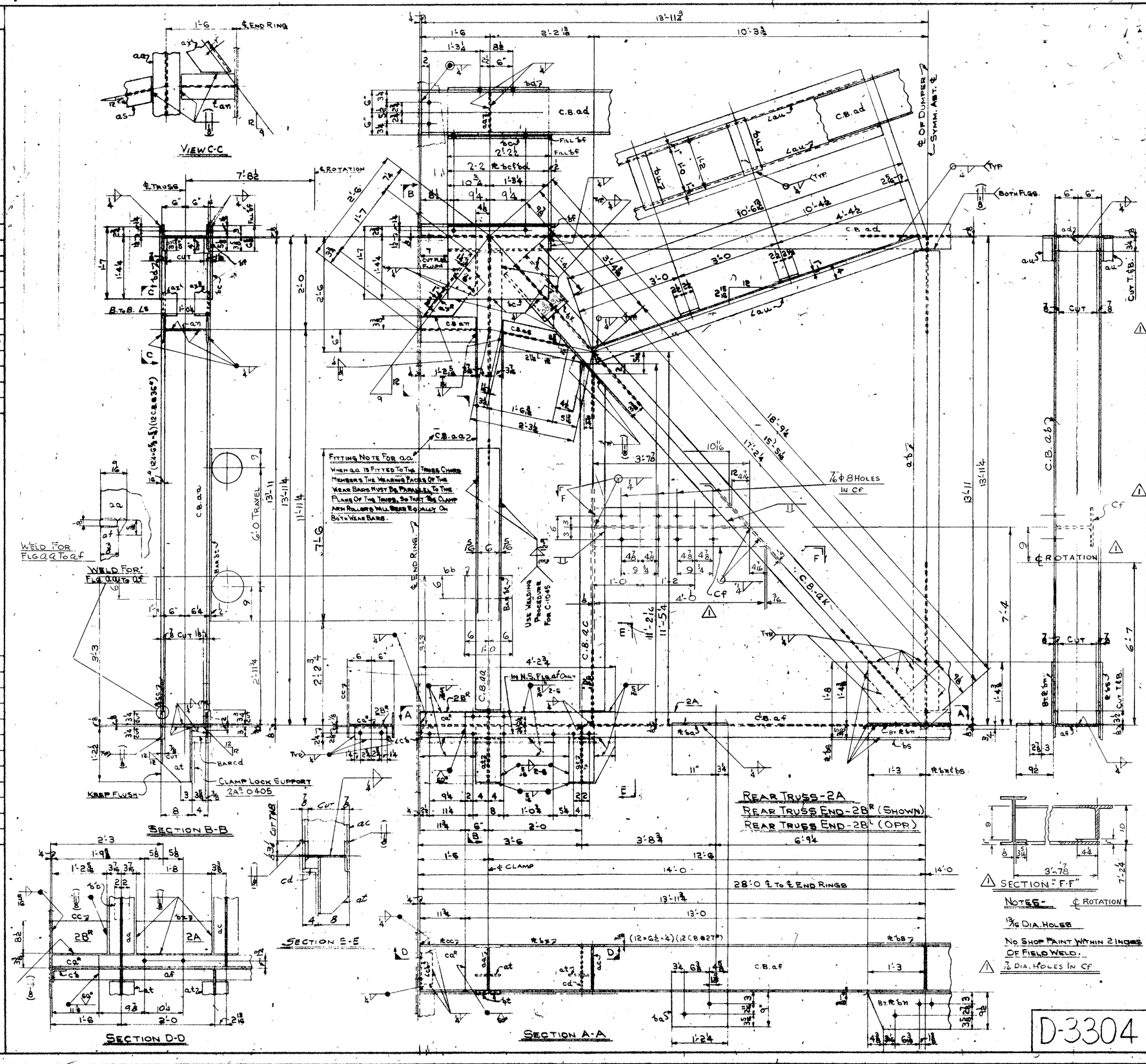

ASSEMBLY MARKS				
aa	ba	ca	da	fa
ab	bb	cb	db	
ac	bc	cc		
ad	bd	cd		
af		cf		
ak				
an				
as				
at				
au				
ax				

SHIPPING MARKS			
2A	3A	4A	5A
2B	3B	4B	
2C	3C		
2D			
2F			
2K			
2N			
2S			
2T			
2U			
2X			

BILL OF MATERIAL

LINE	MARK	NO. PCS.	SECTION	LENGTH		WEIGHT	REMARKS	ITEM Nº
1								
2			ONE - REAR TRUSS - 2A					
3	aa	2	12 C.B. @ 36	13	11	1002		5
4	ab	1	12 C.B. @ 27	13	11	375		10-5
5	ac	2	12 C.B. @ 27	11	2 1/16	603		10-5
6	ad	1	12 C.B. @ 27	27	11 1/2	755		10-5
7	af	1	12 C.B. @ 27	26	0	702		10-5
8	ak	2	12 C.B. @ 27	17	2 1/4	930		10-5
9	an	2	12 C.B. @ 27	1	2 3/8	65		10-5
10	as	2	12 C.B. @ 27	1	11 3/8	103		10-5
11	at	4	8 C.B. @ 28	1	2 1/2	134		5
12	au	4	∠ 4×3×5/16	10	4 1/2	298		5
13	ax R/L	4	∠ 6×4×3/8	1	7	78		5
14	ba	2	PL 9×5/16	1	2 1/4	23		5
15	bb	2	BAR 6×	1	0	30		5
16	bc	2	PL 19×3/8	2	2	106		5
17	bd	2	PL 19×3/8	2	2	106		5
18	bf	2	FILL 6 5/8×1/4	2	2 1/2	26		5
19	bk	2	FILL 7 1/4×1/4	1	4	17		5
20	bm	1	PL 25 1/8×3/8	2	6	69	BENT	5
21	bs	1	PL 20×3/8	2	6	65		5
22	bt	2	BAR 6 1/2 (C-1045)	7	6	120		W
23	bu	4	BAR 5×1/4	1	2	22		5
24	bx	2	PL 8 1/2×3/8	1	8	37		5
25	cd	4	BAR 3×1/4	0	3 3/8	3		5
26	cf	1	10W @ 49	4	0	196		
27			5824#					
28								
29								
30								
31			ONE - REAR TRUSS END - 2B^R (SHOWN)					
32			ONE - REAR TRUSS END - 2B^L (OPP)					
33	ca R/L	2	12 C.B. @ 27	0	11 3/4	54		10-5
34	cb	2	∠ 3 1/2×3 1/2×5/16	0	8	10		5
35	cc	2	PL 8 1/2×3/8	1	2 5/16	26		5
36			90#					
37								
38								
39			REAR TRUSS-2A					
40	A1	8	RUBBER MOUNTS				(W.W GRAINGER INC)	
41			STOCK Nº 1X495				1970 CATALOG	
42			3/4×2" DIA.-3/8-16×1 1/4				PAGE 48	
43			TO MOUNT ITEM 6A TO CF.					
44			IN FIELD					
45								
46								
47								
48								
49								
50								
51								
52								
53								
54								
55								
56								
57								
58								
59								
60								
61								
62								
63								
64								
65								
66								
67								
68								
69								
70								
71								
72								
73								
74								
75								

SHOP PAINT SEE B/M DIV. 87

REV.	DATE	NAME	DESCRIPTION
1	1-15-71	S.K.K.	ADD RUBBER MOUNTS CF & A1

THIS DRAWING IS THE PROPERTY OF HEYL & PATTERSON, INC. AND PUBLISHED IN CONFIDENCE FOR TEMPORARY USE AND TO BE RETURNED THEREAFTER IF REQUESTED. NOT TO BE COPIED OR DISCLOSED TO OTHERS WITHOUT THE EXPRESS CONSENT OF HEYL & PATTERSON, INC.

D-3304

5986-3-0308

HEYL & PATTERSON, INC.
CONTRACTING ENGINEERS
PITTSBURGH, U. S. A.

DET. OF REAR TRUSS

FOR: BOAT
LOC.: MICHIGAN
DIVISION: 03
MADE: 1-9-70
CHECKED: 5-27-70
APPROVED: 4-13-70

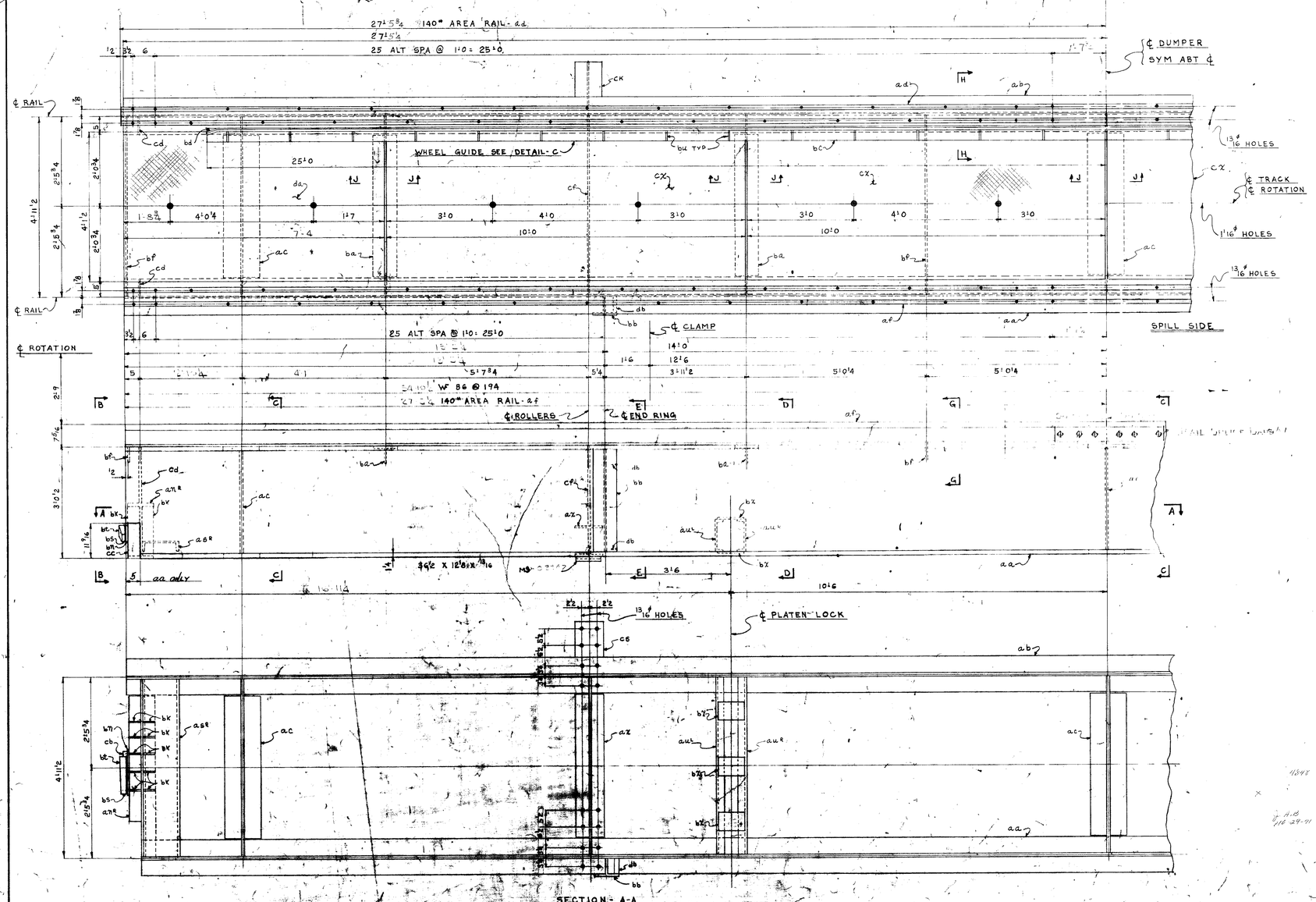

REV. #	DATE	NAME	DESCRIPTION

SCALE 3/4 INCHES TO ONE FOOT

5986-30312

HEYL & PATTERSON, INC.
CONTRACTING ENGINEERS
PITTSBURGH, U.S.A.

ROTARY RAILROAD CAR DUMPER
DETAILS OF PLATEN

JOB: COAL & ORE WATER AND LIGHT
FIRST NAT'L BANK ST. JOSEPH
MUSKEGON MICHIGAN

DRAWN: KEN YOST DATE: 2-12-70
DESIGNED:
APPROVED:
MATERIAL SPECS. NO.

THIS DRAWING IS THE PROPERTY OF HEYL & PATTERSON, INC. AND IS FURNISHED IN CONFIDENCE FOR TEMPORARY USE AND TO BE RETURNED THEREAFTER IF REQUESTED. NOT TO BE COPIED OR DISCLOSED TO OTHERS WITHOUT THE EXPRESS CONSENT OF HEYL & PATTERSON, INC.

Prime Distribution

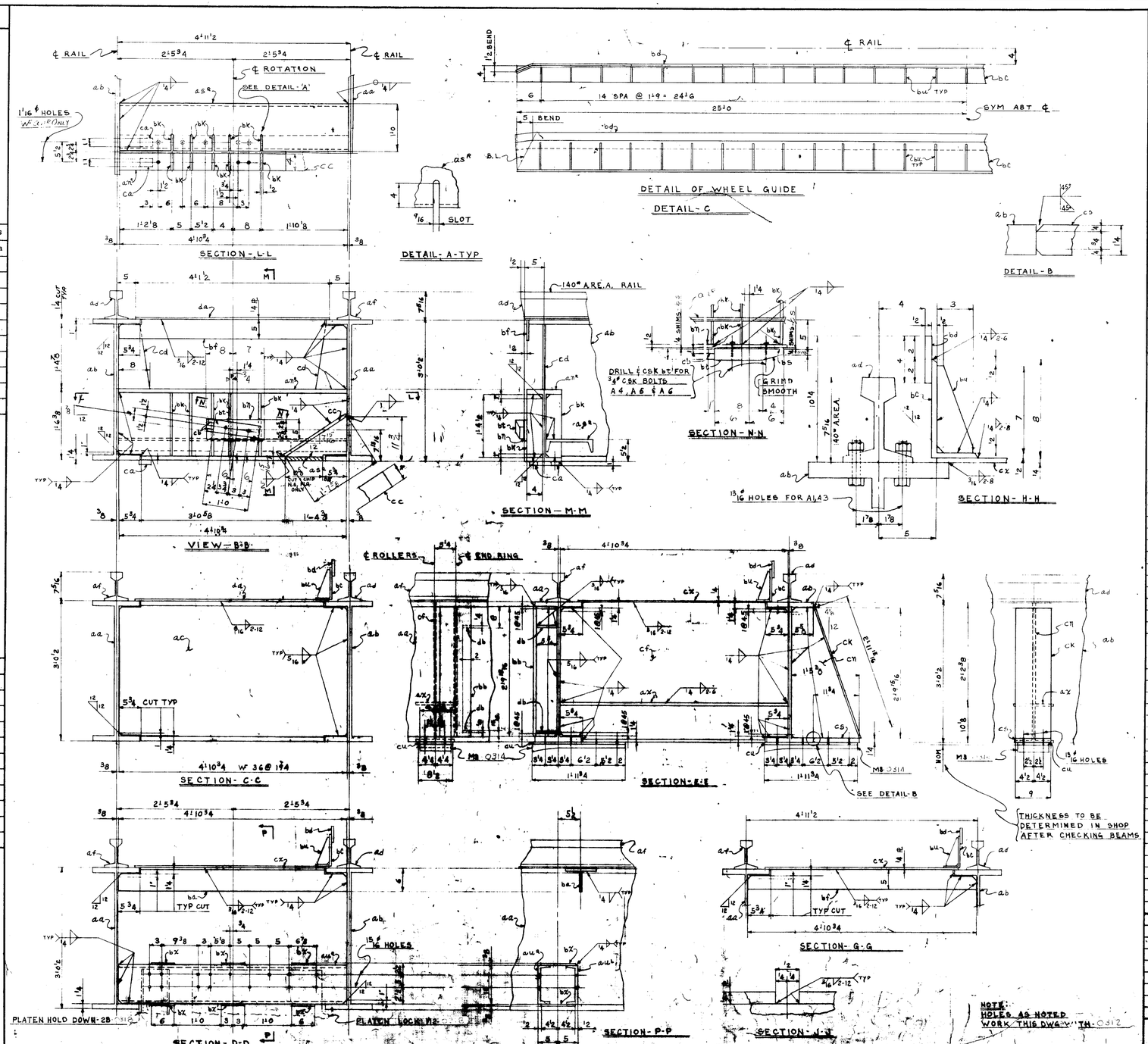

ASSEMBLY MARKS

aa	ba	ca	da	fa
ab	bb	cb	db	
ac	bc	cc		
ad	bd			
af				
ak				
aq				
as				
at				
au				
ax				

SHIPPING MARKS

2A	3A	4A	5A
2B	3B	4B	
2C	3C		
2D			
2F			
2K			
2N			
2S			
2T			
2U			
2X			

BILL OF MATERIAL

LINE	MARK	NO. PCS.	SECTION	LENGTH		WEIGHT	REMARKS	ITEM
1			ONE-PLATEN-2A					
2			ASSEMBLE IN SHOP WITH ROLLER WEDGES-MB-0314					
3								
4	aa	1	WF 36 @ 194	54	10 1/2	10 600		3
5	ab	1	WF 36 @ 194	54	10 1/2	10 600		3
6	ac	3	WF 36 @ 194	4	10 3/4	2850		3
7	ad	2	RAIL 140# AREA	27	5 3/4	2550	2 SHORT ONE END 1 STD PUNCHING ONE END	18
8	af	2	RAIL 140# AREA	27	5 3/4	2540		19
9								
10	am	2	WF 18 @ 85	4	10 3/4	833		8
11	as	2	C 12 @ 25	4	10 3/4	245		15
12	au	4	C 10 @ 30	4	10 3/4	588		3
13	ax	2	WF 10 @ 54	4	10 3/4	530		5
14	ba	4	ST 6 WF @ 20	4	10 3/4	392		5
15	bb	2	ST 6 WF @ 25	2	9 15/16	140		5
16	bc	1	L 8 X 4 X 1/2	50	0	980		1
17	bd	1	BAR 4 X 1/2	50	0	340	A.R.S.	30
18	bf	4	BAR 5 X 1/2	4	10 3/4	168		5
19	bk	20	BAR 4 X 1/2	1	4 1/2	187		5
20	bm	2	BAR 5 X 1/2	1	3	21		5
21	bs	8	BAR 3 X 1/16	1	0	5	SHIMS	5
22	bt	2	BAR 3 X 1	1	0	36		5
23	bu	29	BAR 3 X 1/2	0	7	86		5
24	bx	12	BAR 6 X 3/8	0	9	69		5
25	ca	4	BAR 2 X 1	0	3	7	CHOCK BARS	5
26	cb	4	BAR 1 X 1	0	1 1/2	2	CHOCK BARS	5
27	cc	2	BAR 4 X 3/4	1	7	32		5
28	cd	4	PL 8 X 1/2	1	4 13/16	60		24-5
29	cf	2	PL 26 3/8 X 1/2	4	10 3/4	139		24-5
30	ck	2	PL 9 X 1/2	2	11 11/16	93		24-5
31	cn	2	PL 17 3/8 X 1/2	2	9 3/8	117		24-5
32	cs	2	PL 9 X 1 1/4	0	11 3/4	75		5
33	cu	4	PL 8 1/2 X NOM	1	11 1/4	60	ACTUAL THICKNESS TO BE DETERMINED IN SHOP	5
34	cx	4	[illegible] 49 1/2 X 1/4	10	0	[illegible]		5
35	da	2	[illegible] 49 1/2 X 1/4	7	[illegible]	[illegible]		5
36	A1		3/4 HI TEN BOLTS	0	4		HEX NUTS	
37								
38	A3	4	3/4 Q & T HEX HD CEN WASHERS					
39	A4	4	3/4 SLT FL HD BOLTS	0	[illegible]			
40	A5	4	3/4 HEX HD NUTS					
41	A6	4	3/4 LOCK WASHERS					
42	db	4	BAR 2 X 1/4	0	5 15/16	3		
43								
44	A7	2	SETS OF STD. SPLICE					
45			BARS FOR ABOVE					
46			140# A.R.E.A. RAILS					
47			COMPLETE WITH ALL					
48			BOLTS, NUTS & WASHERS					
49								
50								
51								
52								
53								
54								
55								
56								
57								
58								
59								
60			PAINT S/M DIV 87					
61								
62								
63								
64								
65								
66								
67								
68								
69								
70								
71								
72								
73			C.I. & P.			2,575		
74			STL.			36,390		
75					WT	38,965		

59863 0313

HEYL & PATTERSON, INC.
CONTRACTING ENGINEERS
PITTSBURGH, U.S.A.

ROTARY RAILROAD CAR DUMPER
DETAILS SEE PLATEN

BOARD OF WATER & LIGHT
FIRE UNIT OSLIN STATION
LANSING, MICHIGAN

DRAWN	V.G. YOUNG		12-12-73
DESIGN			
CHECKED			
APPROVED			

REV. #	DATE	NAME	DESCRIPTION

THIS DRAWING IS THE PROPERTY OF HEYL & PATTERSON, INC. AND FURNISHED IN CONFIDENCE FOR TEMPORARY USE AND TO BE RETURNED THEREAFTER IF REQUESTED. NOT TO BE COPIED OR DISCLOSED TO OTHERS WITHOUT THE CONSENT OF HEYL & PATTERSON, INC.

A.O. SMITH CO., FON...

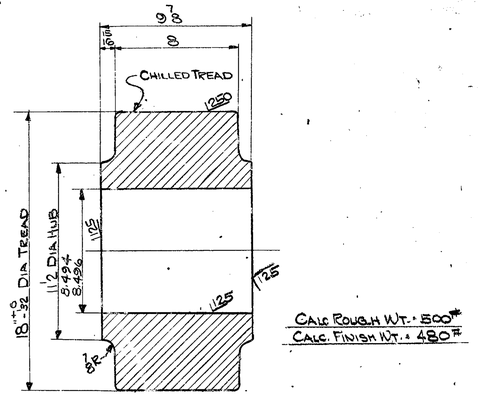

CALC ROUGH WT. = 500#
CALC. FINISH WT. = 480#

4 ~ 18" DIA. PLATEN ROLLER
PAT. 20543 CHILLED & GROUND CAR WHEEL IRON

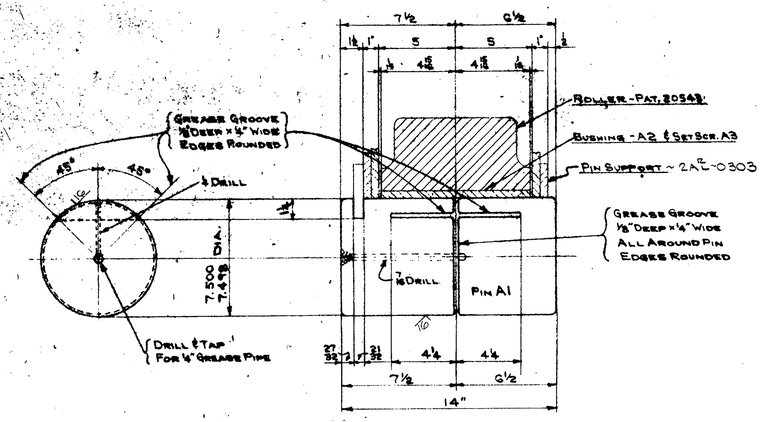

4 ~ PLATEN ROLLER PIN ASSEMBLY ~ M1
ASSEMBLE IN FIELD WITH END RINGS

SHOP NOTE:
APPLY MOLYCOTE M88 LUBRICANT TO ABOVE PINS AT ASSEMBLY.

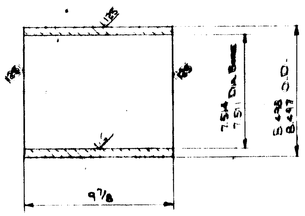

4 ~ ROLLER BUSHING A2

BILL OF MATERIAL

LINE	MARK	NO REQ	DESCRIPTION	WEIGHT	NOTE IN SHOP
1					
2			4 ~ PLATEN ROLLER PIN ASSEMBLIES ~ M1		
3			ASSEMBLE IN FIELD WITH END		
4			RINGS 2A2-0303		
5					
6	A1	4	ROLLER PINS 7 1/2 DIA. x 14 LG.	700	
7			C-1020 T. & P. STL.		
8					
9	A2	4	PLAIN BUSHINGS ~ 9 7/8" F. LG.	160	
10			8.498" - 8.497" O.D. ~ 7.514" - 7.511" BORE		
11			SAE 67 BRONZE WT. = 40# EA.		
12	A3	16	5/8 DIA. x 1/2 LG. HEADLESS BRASS SET SCREW		
13					
14	NAV 20543	4	18" DIA. PLATEN ROLLERS	1920	
15			CHILLED & GROUND CAR WHEEL IRON		
16			8" TREAD ~ 9 7/8 LG. THRU BORE		
17			BORE 8.494 ~ 8.496 DIA. R.W.T. = 500# EA.		
18					
19		1	QT. MOLYCOTE M88 LUBRICANT		
20					
21					
22					
23					
24					
25					
26					
27					
28					
29					
30					
31					
32					
33					
34					
35					
36					
37					
38					
39					
40					
41					
42					
43					
44					
45					
46					
47					
48					
49					
50					
51					
52					
53					
54					
55					
56					
57					
58					
59					
60					
61					
62					
63					
64					
65					
66					
67					
68					
69					
70					
71					
72					
73					
74					
75					

H848 15B-54

J.A.B. 10-29-71

2780

REV #	DATE	NAME	DESCRIPTION

THIS DRAWING IS THE PROPERTY OF HEYL & PATTERSON, INC., AND FURNISHED IN CONFIDENCE FOR TEMPORARY USE AND TO BE RETURNED THEREAFTER IF REQUESTED. NOT TO BE COPIED OR DISCLOSED TO OTHERS WITHOUT THE EXPRESS CONSENT OF HEYL & PATTERSON, INC.

D-3322

5986-3-0315

HEYL & PATTERSON, INC.
CONTRACTING ENGINEERS
PITTSBURGH, U.S.A.

ROTARY RAILROAD CAR DUMPER
DETAILS OF PLATEN ROLLER PINS

FOR BOARD OF WATER AND LIGHT
FIRST UNIT - DELTA STATION
LANSING, MICHIGAN

DIVISION
MADE G. DOLEZ DATE 2-19-70
CHECKED T. WILLIAMS DATE 4-13-70
APPROVED W.C. DATE 4-13-70

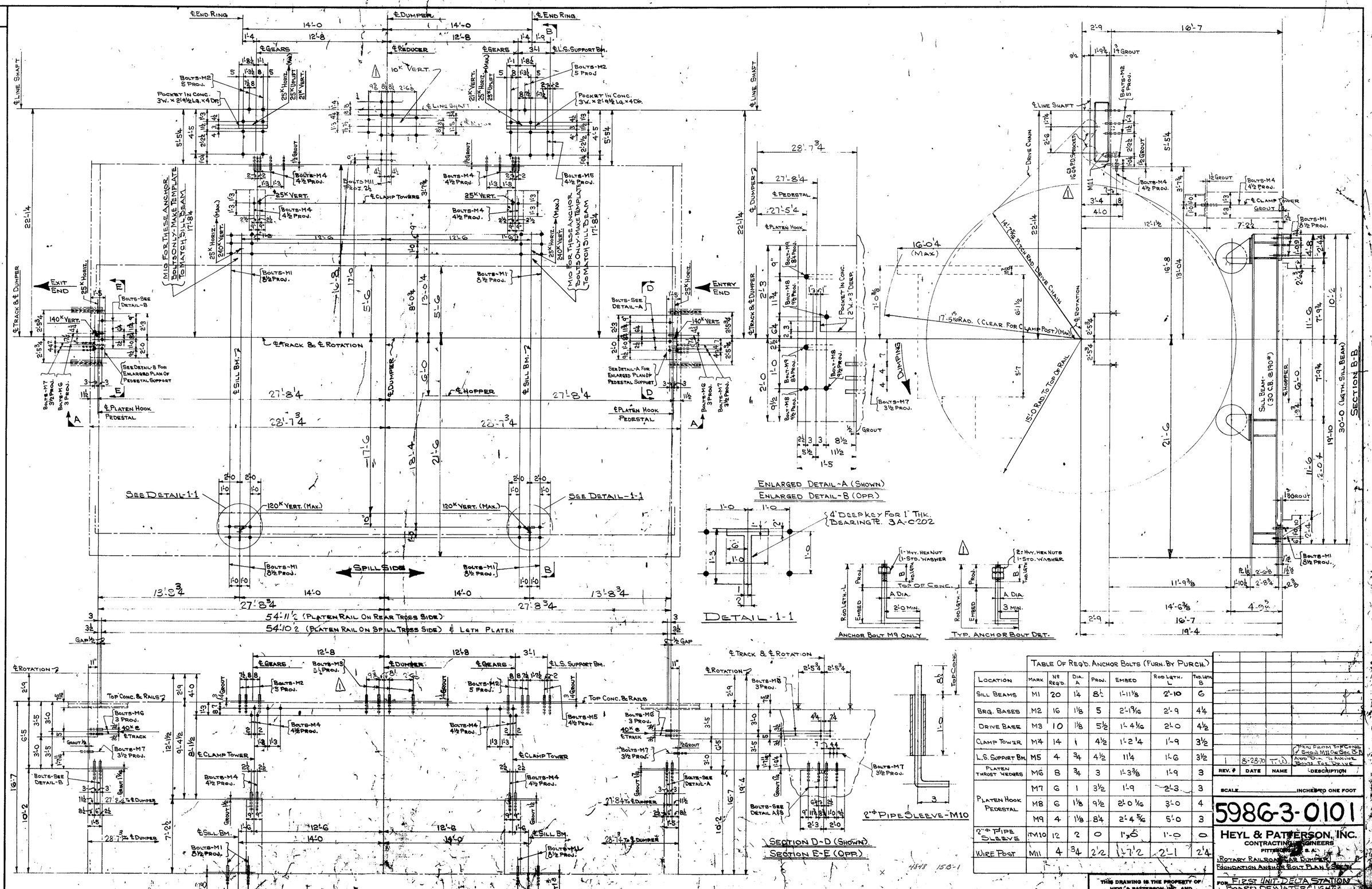

Table Of Req'd. Anchor Bolts (Furn. By Purch.)							
Location	Mark	No Req'd.	Dia. A	Proj.	Embed	Rod Lgth. L	Thd. Lgth. B
Sill Beams	M1	20	1¼	8½	1'-11⅛	2'-10	6
Brg. Bases	M2	16	1⅛	5	2'-1 9/16	2'-9	4¼
Drive Base	M3	10	1⅛	5½	1'-4 1/16	2'-0	4½
Clamp Tower	M4	14	1	4½	1'-2¼	1'-9	3½
L.S. Support Bm.	M5	4	¾	4½	11¼	1'-6	3½
Platen Thrust Wedges	M6	8	¾	3	1'-3⅜	1'-9	3
Platen Hook Pedestal	M7	6	1	3½	1'-9	2'-3	3
	M8	6	1⅛	9½	2'-0 1/16	3'-0	4
	M9	4	1⅛	8¼	2'-4 5/16	5'-0	3
2" ϕ Pipe Sleeve	M10	12	2	0	1" x 6	1'-0	0
Wire Post	M11	4	¾	2½	1'-7½	2'-1	2¼

Rev. #	Date	Name	Description
1	8-25-70	T.W.	Pen From Top Conc. Show M11 On Sec. B-B. Add Dim. To Anchor Bolts For Drive

Scale ____ Inches To One Foot

5986-3-0101

HEYL & PATTERSON, INC.
CONTRACTING ENGINEERS
PITTSBURGH, PA. U.S.A.

Rotary Railroad Car Dumper
Foundation Anchor Bolt Plan & Sections

For First Unit - Delta Station
Board Of Water & Light
Lansing, Michigan

Contract Div. 13 — Proj. No. ____
Made G. Dolfi — Date 11-24-69
Traced ____ — 1-8-70
Checked ____ — 2-6-70
Approved ____
Machinery Bills No. ____

This drawing is the property of Heyl & Patterson, Inc., and furnished in confidence for temporary use and to be returned thereafter if requested, not to be copied or disclosed to others without the express consent of Heyl & Patterson, Inc.

Print Distribution
Item No. ____

1933 Jenkin, A.I.S.E. Mfg. Co., Pgh., Pa.

Erector Note:

Max. Allowable Deviation Of Ring Rail Head From The Plane Of The Ring Must Be Limited To ±⅛ After Erection.

Reference Drawing

Foundation Arrangement	0101
Ga. Arrangement Of Car Sensors	0324
Limit Switch Arrangement	0321
Clamp Lock Arrangement	0106
Rotate Drive Arrangement	0201
Platen Lock Arrangement	0104
Platen Hook & Pedestal Arrangement	0105
Plan Of Dumper	0103
Arrg't Of Car Clamps & Lubrication System	0701

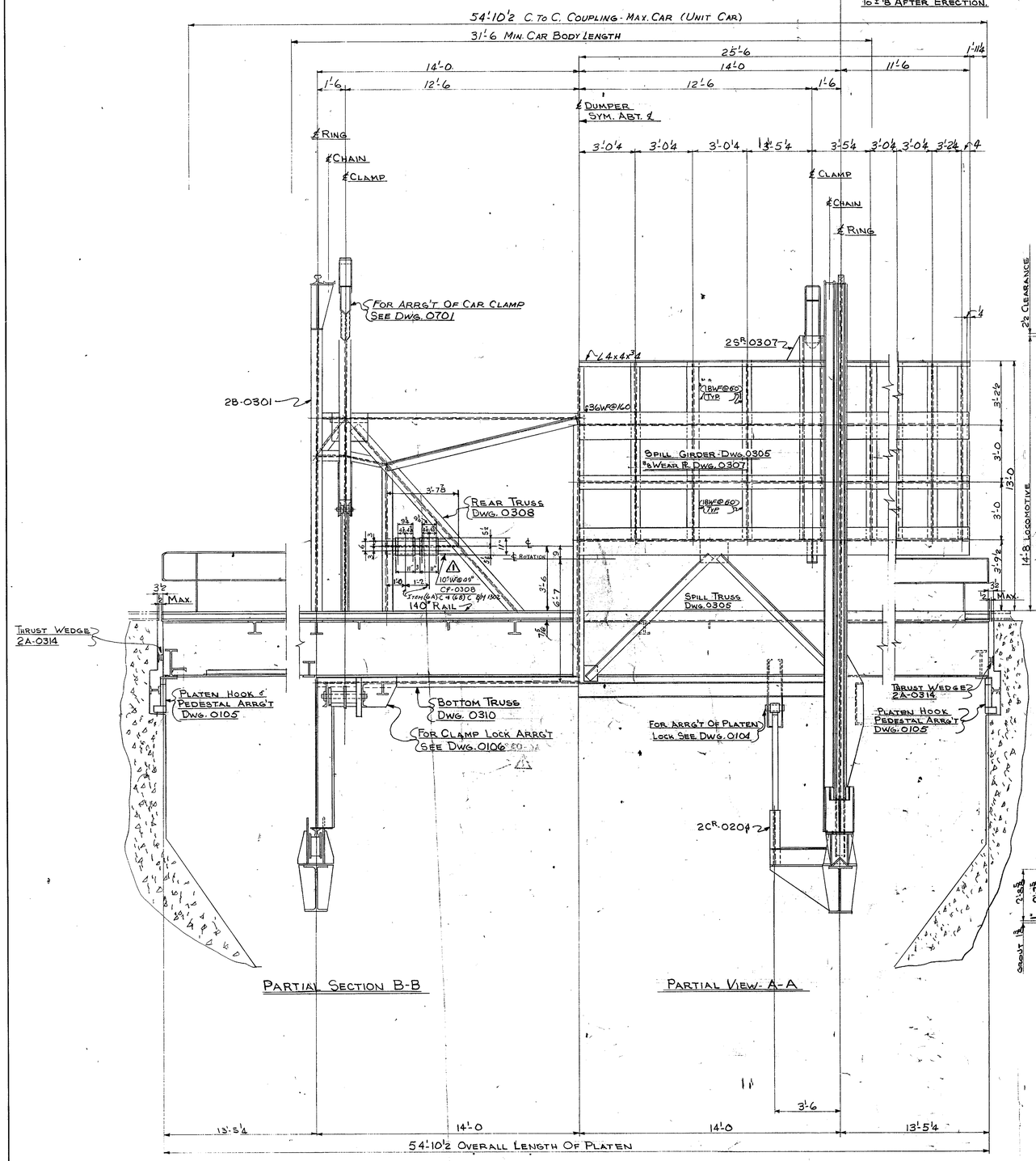

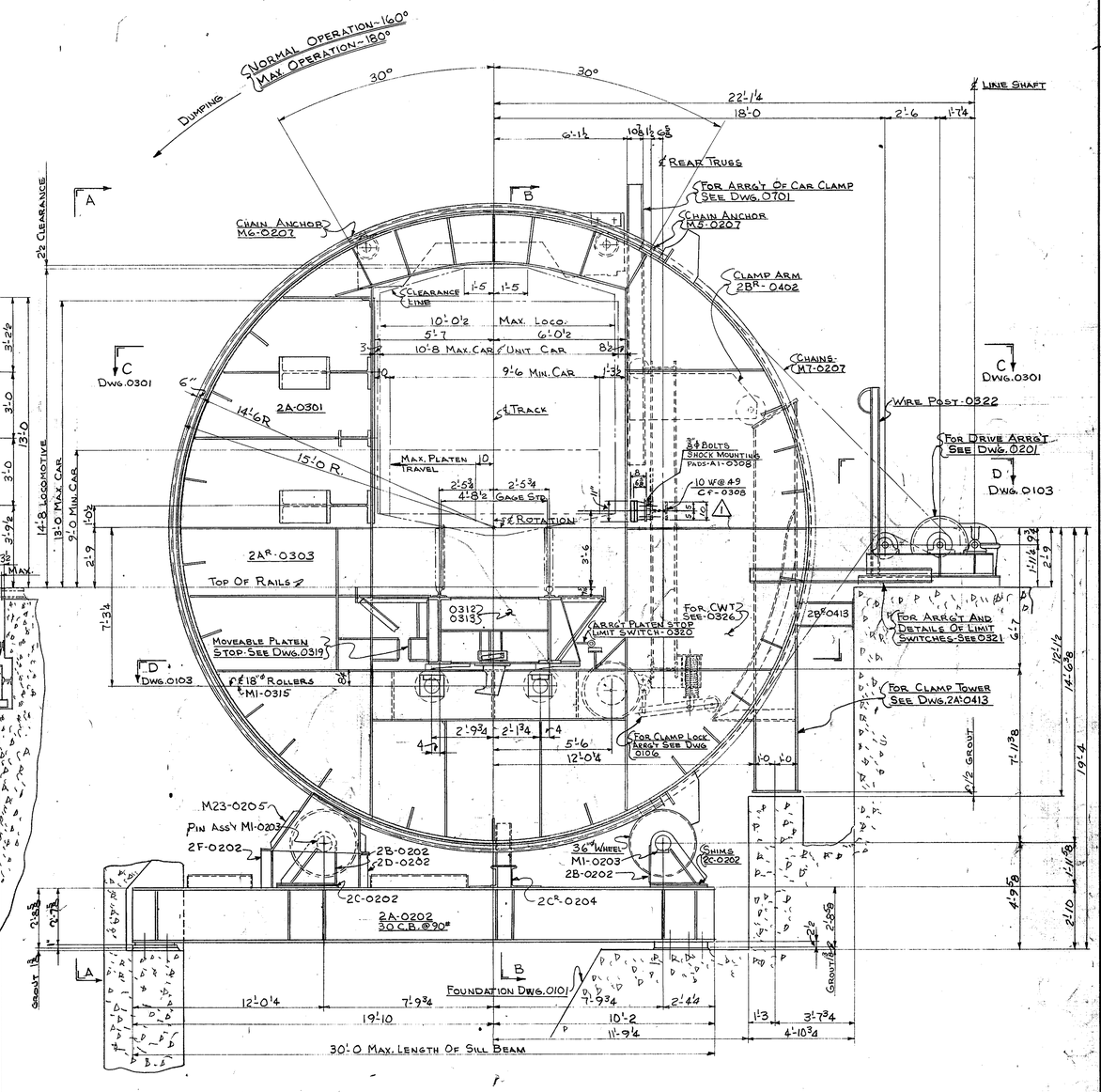

End View Of Car Dumper

REV.#	DATE	NAME	DESCRIPTION
1	1-15-71	S.K.K.	Added Beam 10WF49 - CF

THIS DRAWING IS THE PROPERTY OF HEYL & PATTERSON, INC., AND FURNISHED IN CONFIDENCE FOR TEMPORARY USE AND TO BE RETURNED THEREAFTER IF REQUESTED. NOT TO BE COPIED OR DISCLOSED TO OTHERS WITHOUT THE EXPRESS CONSENT OF HEYL & PATTERSON, INC.

5986-3-0102

HEYL & PATTERSON, INC.
CONTRACTING ENGINEERS
PITTSBURGH, U.S.A.

Rotary Railroad Car Dumper
General Arrangement
Elevations
For Board Of Water And Sewer
First Cut - Delta Structure
Lansing, Michigan

Division 21
Made G. Dolfi
Checked J. P. Fontal
Approved W.J.

4898 168-2

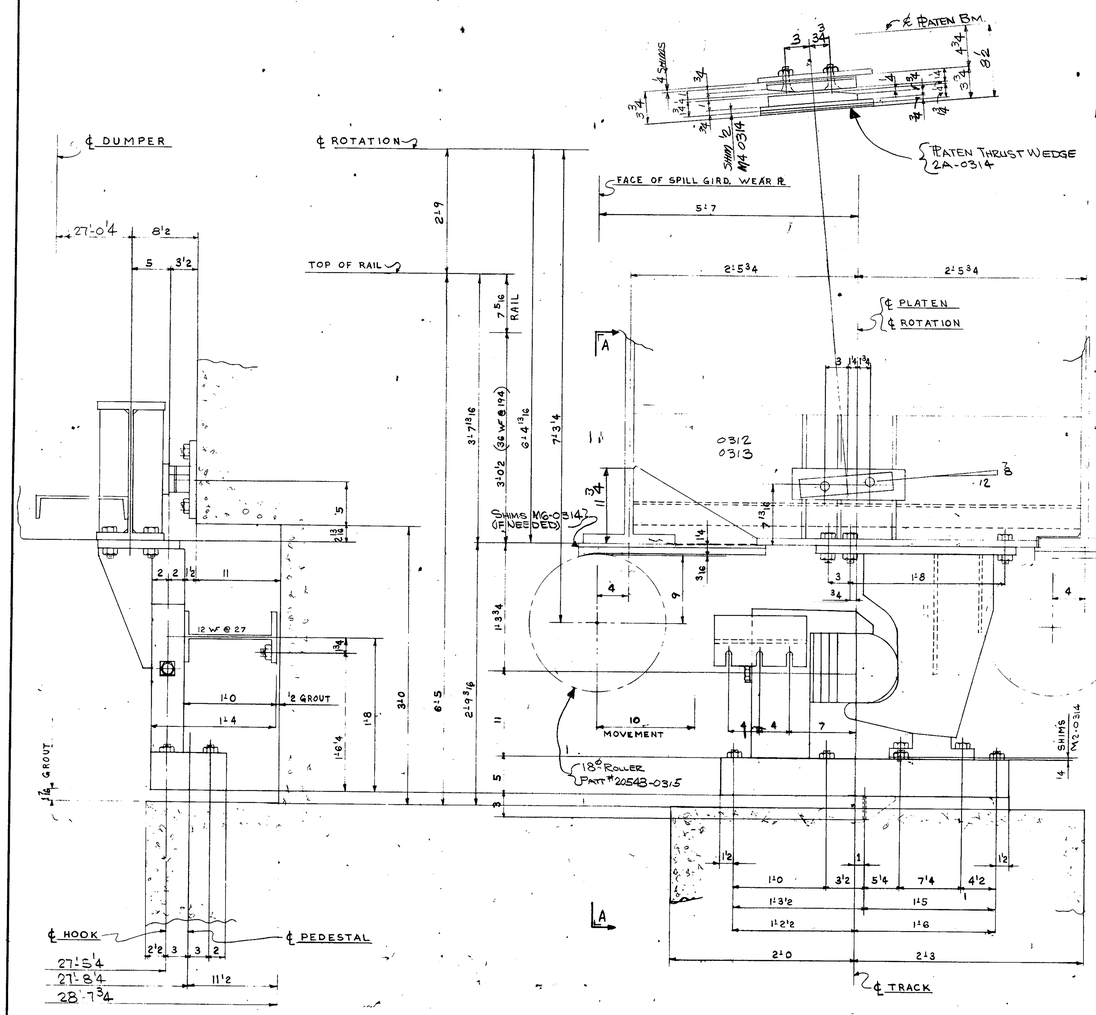

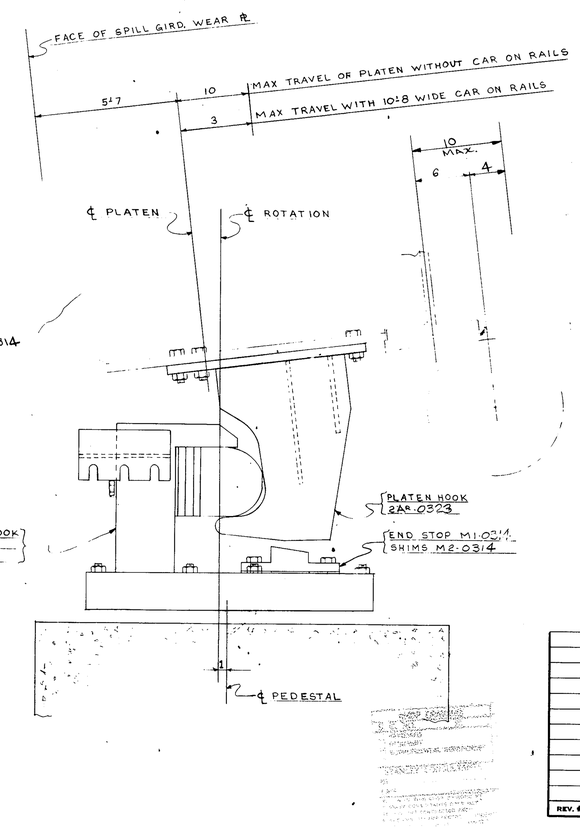

DUMPER ROTATED TO SHOW MAXIMUM TRAVEL OF PLATEN ON ROLLERS FOR 10'-8 WIDE RAILROAD CAR.

REV. #	DATE	NAME	DESCRIPTION

SCALE 1½ INCHES TO ONE FOOT

5986-3-0105

HEYL & PATTERSON, INC.
CONTRACTING ENGINEERS
PITTSBURGH, U. S. A.

ROTARY RAILROAD CAR DUMPER
GEN. ARRGT. OF PLATEN HOOK & PEDESTAL

FOR BOARD OF WATER AND LIGHT
EAST UNIT DELTA STATION
LANSSING, MICHIGAN

CONTRACT DIV. 01 PRO. NO.
MADE G. DOLFI DATE 12-70
TRACED " "
CHECKED J. P. Ford " 1-5-70
APPROVED " " 2-17-70
MACHINERY BILLS NO.

THIS DRAWING IS THE PROPERTY OF HEYL & PATTERSON, INC., AND FURNISHED IN CONFIDENCE FOR TEMPORARY USE AND TO BE RETURNED THEREAFTER IF REQUESTED. NOT TO BE COPIED OR DISCLOSED TO OTHERS WITHOUT THE EXPRESS CONSENT OF HEYL & PATTERSON, INC.

PRINT DISTRIBUTION

9283 ZENITH, A. G. S. SMITH CO., PGH., PA.

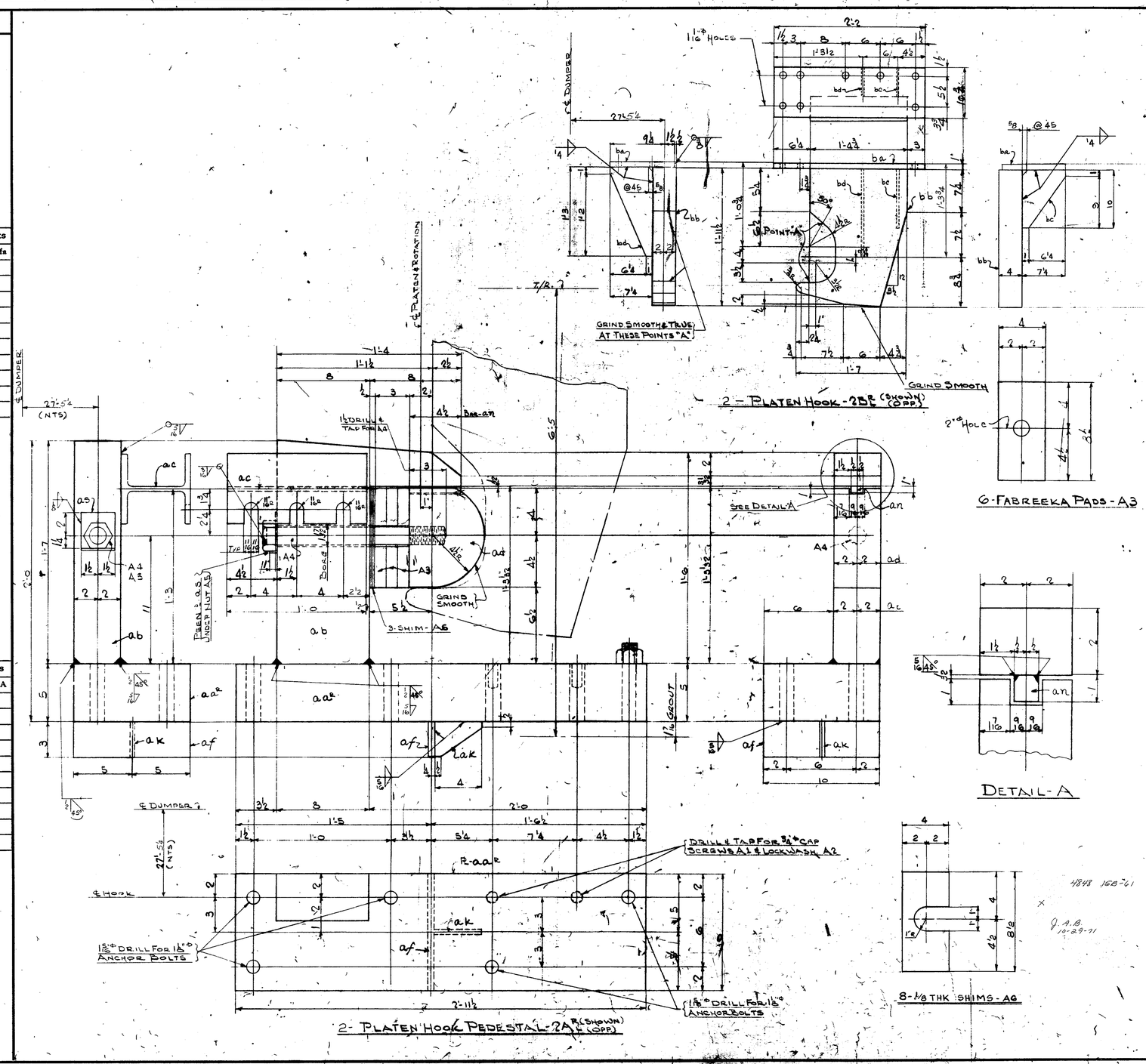

ASSEMBLY MARKS				
aa	ba	ca	da	fa
ab	bb	cb	db	
ac	bc	cc		
ad	bd			
af				
ak				
an				
as				
at				
au				
ax				

SHIPPING MARKS			
2A	3A	4A	5A
2B	3B	4B	
2C	3C		
2D			
2F			
2K			
2N			
2S			
2T			
2U			
2X			

BILL OF MATERIAL

LINE	MARK	NO. PCS.	SECTION	LENGTH	WEIGHT	REMARKS	ITEM NO.	PURCHASING	ACCT.
1			2-PLATEN HOOK PEDESTALS-2A						
2			ASSY IN SHOP WITH M1 & M2-034						
3	aa	2	PL - 10 x 5	2	11½	1030	S		
4	ab	2	PL - 16 x 4	1	7	707	S		
5	ac	2	WF - 12 @ 27	1	0	54	10-5		
6	ad	2	PL - 7 x 4	0	9	145	S		
7	af	2	BAR - 3 x ½	0	10	9	S		
8	ak	2	BAR - 3 x ¾	0	4	10	S		
9	an	2	BAR - 1 x 1	0	4½	3	S		
10	as	2	BAR - 3 x 7/16	0	4½	2	S		
11			(1960)						
12									
13									
14	A1	4	¾" HEX HD CAP SCR	0	2½				
15	A2	4	¾" SP. LOCKWASH						
16	A3	6	FABREEKA 4 x 1	0	8½				
17	A4	2	1½" THD STUDS	1	8½				
18	A5	2	1½" HEX NUTS						
19	A6	8	PL - 4 x ½	0	8½	30 (SHIMS)	S		
20									
21									
22			2-PLATEN HOOKS-2B						
23	ba	2	PL 10¾ x 1	2	2	128	S		
24	bb	2	PL - 19 x 4	1	11½	1025	S		
25			(CUT bb FROM MAT'L REMAINING						
26			FROM DRUM BAND M1-0407)						
27	bc	2	PL 7¼ x 12	0	10	20	295		
28	bd	2	PL 7¼ x 12	1	3	30	295		
29			1203						
30									
31									
32									
33									
34									
35									
36									
37									
38									
39									
40									
41									
42									
43									
44									
45									
46									
47									
48									
49									
50									
51									
52									
53									
54									
55									
56									
57									
58									
59									
60			SHOP PAINT						
61			SEE SHOP BILLS - DIV. 87						
62									
63									
64									
65									
66									
67									
68									
69									
70									
71									
72									
73									
74									
75						3193			

REV. #	DATE	NAME	DESCRIPTION

THIS DRAWING IS THE PROPERTY OF HEYL & PATTERSON, INC., AND FURNISHED IN CONFIDENCE FOR TEMPORARY USE AND TO BE RETURNED THEREAFTER IF REQUESTED. NOT TO BE COPIED OR DISCLOSED TO OTHERS WITHOUT THE EXPRESS CONSENT OF HEYL & PATTERSON, INC.

5986-3-0323

HEYL & PATTERSON, INC.
CONTRACTING ENGINEERS
PITTSBURGH, U.S.A.

ROTARY GAS DUMPER
DETAILS OF PLATEN HOOK & PLATEN PEDESTAL
FOR BOARD OF WATER AND LIGHT
FIRST UNIT - DELTA STATION
LANSING, MICHIGAN

DIV. 03
MADE KEN TOBST
CHECKED T. WEIDNER
APPROVED WMC

SCALE
DATE 2-17-70
2-17-70
2-13-70

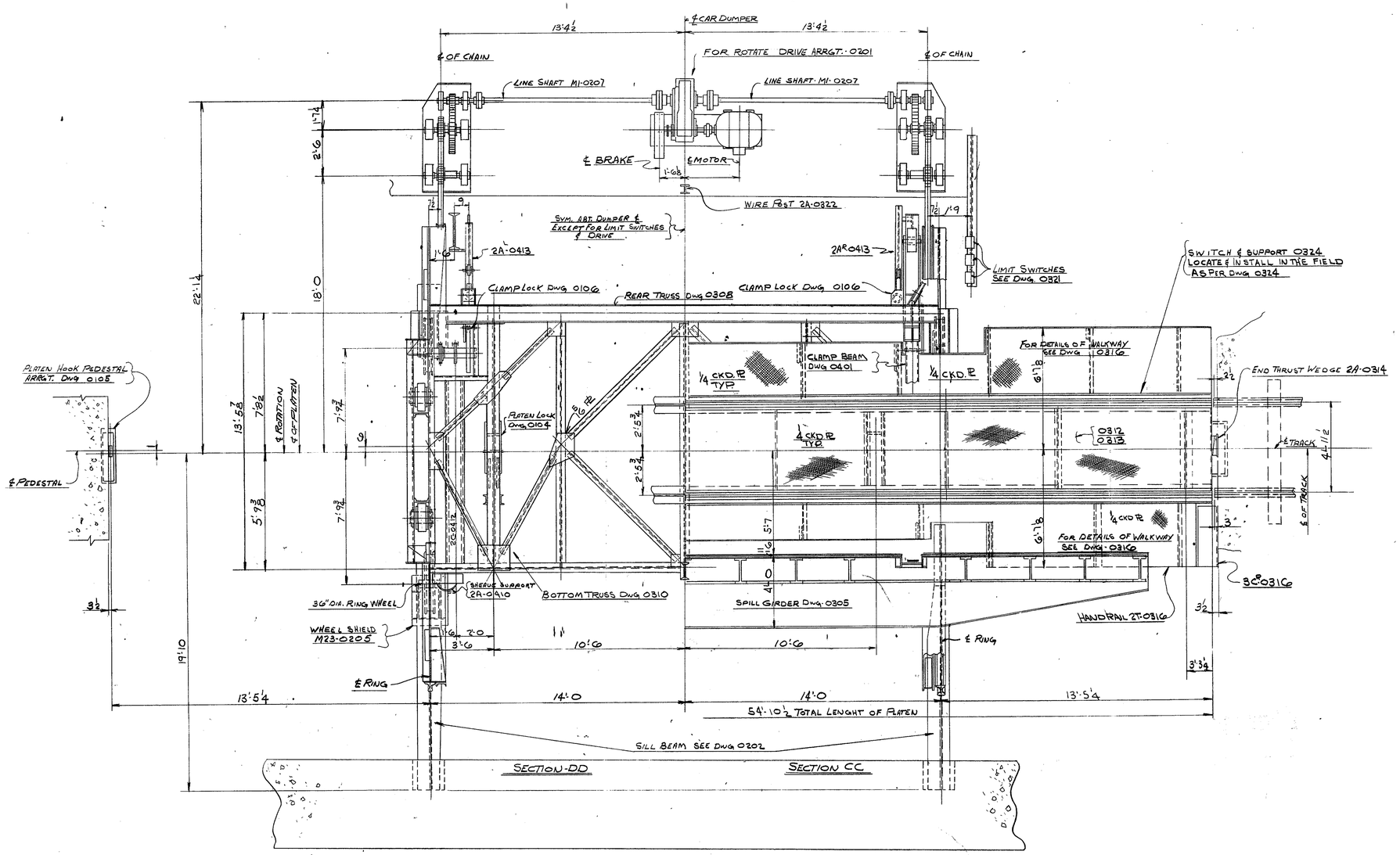

WORK THIS DWG WITH DWG 0102

X 4848 15B-3

R W.B

D-3042

REV. #	DATE	NAME	DESCRIPTION

THIS DRAWING IS THE PROPERTY OF HEYL & PATTERSON, INC., AND FURNISHED IN CONFIDENCE FOR TEMPORARY USE AND TO BE RETURNED THEREAFTER IF REQUESTED. NOT TO BE COPIED OR DISCLOSED TO OTHERS WITHOUT THE EXPRESS CONSENT OF HEYL & PATTERSON, INC.

5986-3-0103

HEYL & PATTERSON, INC.
CONTRACTING ENGINEERS
PITTSBURGH, U.S.A.

ROTARY RAILROAD CAR DUMPER
GENERAL ARRGT. PLAN

FOR BOARD OF WATER AND LIGHT
FIRST UNIT - DELTA STATION
LANSING MICHIGAN

DIVISION _____ SCALE _____
MADE G.O. DOLFI DATE 1-6-70
CHECKED J.P. FUNTAC " 1-8-70
APPROVED W.S. " 2-16-70

DIETZGEN-PITTSBURGH

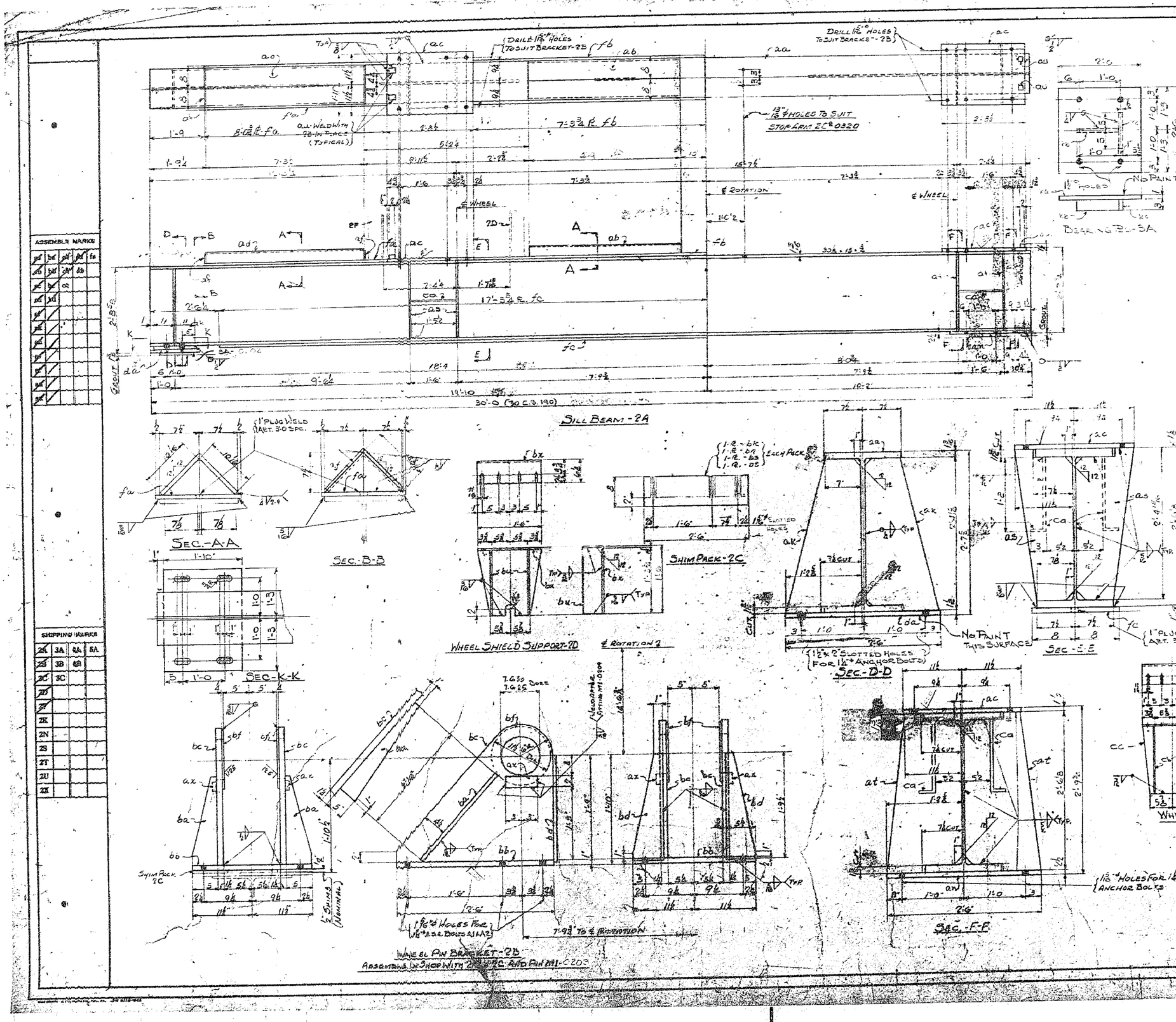

BILL OF MATERIAL

LINE	MARK	NO. PCS.	SECTION	LENGTH	WEIGHT	REMARKS	ITEM #
1			2-SILL BEAMS 2A				
2			SHIPPED DETACHED TO 3A				
3	[illegible]	2	30CB190	[illegible]	[illegible]		7
4	[illegible]	[illegible]	2-20 1/2 x 3/8	[illegible]	245	BENT	57
5	[illegible]	6	2-22 x 1/4	2	5 1/2	1078	FIN PLATE	5
6	[illegible]	2	2-20 1/2 x 3/8	7	5 1/2	[illegible]	BENT	5
7	[illegible]	4	2-72 x 6	1	3	24		5
8	[illegible]	4	2-14 1/2 x 7	1	4 13/16	391		29
9	[illegible]	2	2-30 x 2 1/2	1	6	[illegible]		5
10	[illegible]	8	2-[illegible] x 1/2	2	4 13/16	897		29-5
11	[illegible]	8	2-[illegible] x 2	2	[illegible]	448		29-5
12	[illegible]	[illegible]	[illegible]	[illegible]	[illegible]			5
13	[illegible]	8	PL 12 x 1/2	1	5 1/2	323	BENT	5
14	[illegible]	[illegible]	2-22 x [illegible]	1	6	570		5
15	[illegible]	[illegible]	PL [illegible]	8	[illegible]	[illegible]		5
16	[illegible]	[illegible]	PL 16 x 1	7	5 1/2	803		5
17	[illegible]	[illegible]	PL 16 x 1	17	5 1/2	1902		5
18			2-WHEEL SHIELD SUPPORTS 2D			(190 LB)		
19			2-WHEEL SHIELD SUPPORTS 2F					
20	[illegible]	8	BAR [illegible]	2	6	[illegible]		5
21	[illegible]	3	BAR [illegible]	1	10	124		5
22	[illegible]	2	[illegible]	2	9	[illegible]		5
23	[illegible]	8	[illegible] BAR	2	6	[illegible]		29-5
24	[illegible]	3	BAR [illegible]	[illegible]	12	132		5
25	[illegible]	8	[illegible] BOLTS			150		5
26	[illegible]	[illegible]	1 1/4" A.S.A. BOLTS	3	5			
27	[illegible]	[illegible]	1 1/4" HEX. JAM NUTS					
28			(3014)					
29								
30			8 SHIM PACKS-2C					
31	[illegible]	[illegible]	[illegible] SHOP WITH 2A & 2B	[illegible]	[illegible]	[illegible]	SHIMS FOR WHEEL SHIELDS	29-5
32	[illegible]	2	PL [illegible]	2	[illegible]	270		5
33	[illegible]	6	PL [illegible]	2	[illegible]	[illegible]		5
34	[illegible]	2	PL [illegible]	2	[illegible]	70		5
35	[illegible]	10	PL [illegible]	2	[illegible]	70		5
36			3860#					
37			2-WHEEL SHIELD SUPPORTS 2D					
38	[illegible]	4	BAR [illegible]	1	[illegible]	71	ARS	5
39	[illegible]	6	BAR [illegible]	1	11 1/2	66	BENT	5
40			(190)					
41								
42			2-WHEEL SHIELD SUPPORTS 2F					
43	CC	2	BAR [illegible]	[illegible]	6b		BENT	5
44	CD	4	BAR [illegible]	[illegible]	[illegible]		ARS	5
45			(102)					
46								
47					2			
48								
49								
50								
51			2-BEARING PLS-3A					
52	a	2	PLS-24 x 1	2	6	203		
53	b	2	BARS-3 x 1	1	0	33		
54	c	2	BARS-3 x 1	0	10	18		

23868

ASSEMBLY MARKS				
[illegible]	[illegible]	[illegible]	[illegible]	[illegible]
[illegible]	[illegible]	[illegible]	[illegible]	
[illegible]	[illegible]	[illegible]		
[illegible]	[illegible]			
[illegible]				
[illegible]				
[illegible]				
[illegible]				
[illegible]				
[illegible]				

SHIPPING MARKS			
2A	3A	4A	5A
2B	3B	4B	
2C	3C		
2D			
2F			
2K			
2N			
2S			
2T			
2U			
2X			

REV. #	DATE	NAME	DESCRIPTION

SCALE ____ INCHES TO ONE FOOT

5986-3-0202

HEYL & PATTERSON, INC.
CONTRACTING ENGINEERS
PITTSBURGH, U.S.A.

ROTARY RAILROAD CAR DUMPER
SILL BEAM & WHEEL PIN BRACKET

FOR BOARD OF WATER AND LIGHT
FIRST UNIT: DELTA STATION
LANSING, MICHIGAN

DESIGNED BY [illegible] 2-16-70
MADE: KEN [illegible]
TRACED: [illegible]
CHECKED: T. WEIRICH 2-21-70
APPROVED: [illegible]
STRUCTURAL DETAILS BY: [illegible] DATE: [illegible]

PRINT DISTRIBUTION ITEM NO. [illegible]

THIS DRAWING IS THE PROPERTY OF HEYL & PATTERSON, INC. AND FURNISHED IN CONFIDENCE FOR TEMPORARY USE AND TO BE RETURNED THEREAFTER IF REQUESTED. NOT TO BE COPIED OR DISCLOSED TO OTHERS WITHOUT THE EXPRESS CONSENT OF HEYL & PATTERSON, INC.

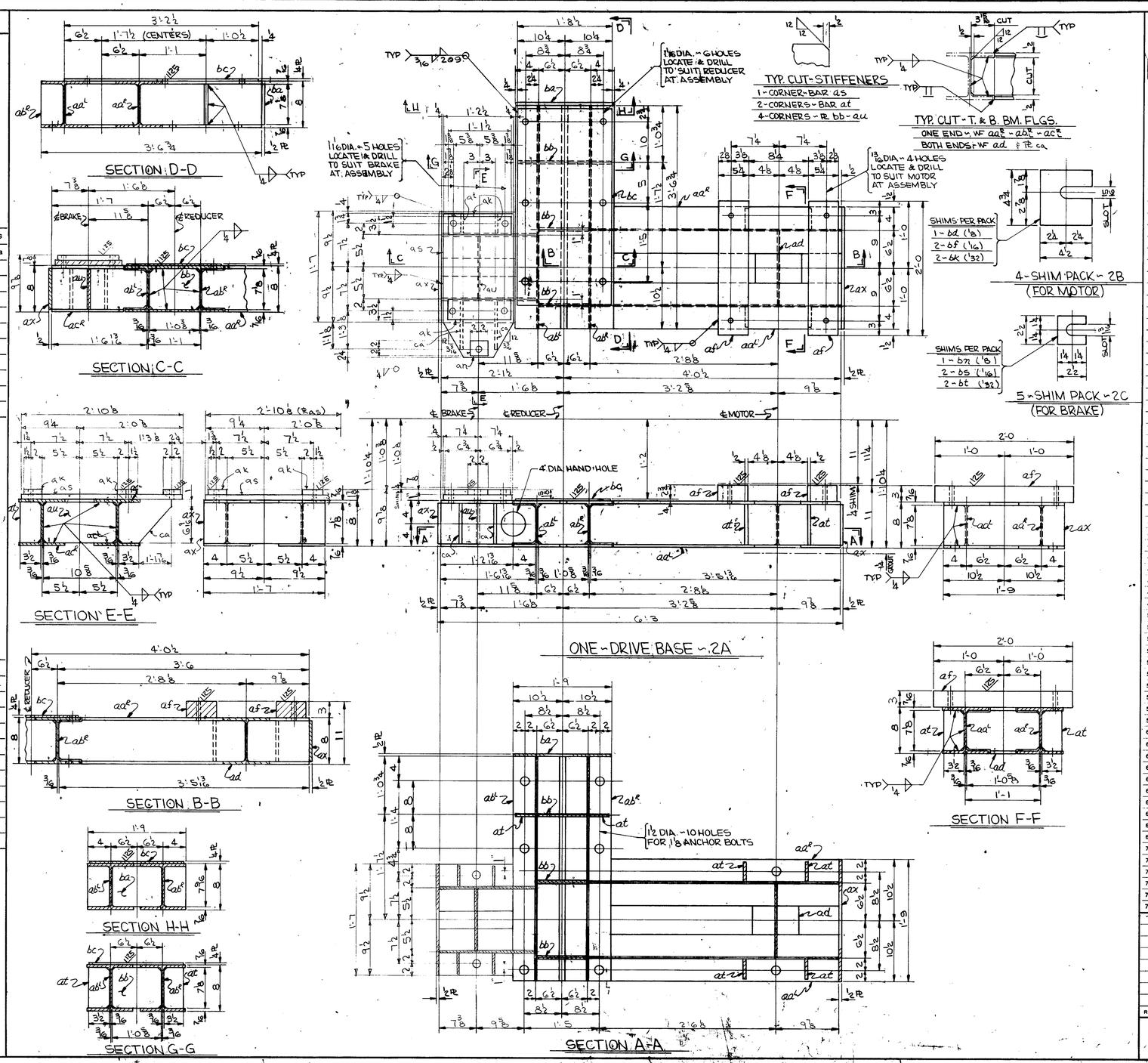

ASSEMBLY MARKS				
aa	ba	ca	da	fa
ab	bb	cb	db	
ac	bc	cc		
ad	bd			
af				
ak				
an				
as				
at				
au				
ax				

SHIPPING MARKS			
2A	3A	4A	5A
2B	3B	4B	
2C	3C		
2D			
2F			
2K			
2N			
2S			
2T			
2U			
2X			

BILL OF MATERIAL

LINE	MARK	NO. PCS.	SECTION	LENGTH		WEIGHT	REMARKS
1							
2			ONE-DRIVE BASE - 2A				
3			ASSEMBLE IN SHOP WITH DRIVE UNIT - M2-0201 AS PER DWG-0201				
4							
5	aa*	2	8 WF @ 31#	3	5 3/16	222	
6	ab*	2	8 WF @ 31#	3	6 3/8	202	
7	ac*	2	8 WF @ 31#	1	6 13/16	88	
8	ad	1	8 WF @ 31#	1	0 5/8	31	
9	af	2	BAR 5 1/4 x 3 1/4	2	0	200	FIN TO 3
10	ak	2	BAR 3 1/2 x 1	1	1 1/2	27	FIN TO 5/8
11	an	1	BAR 4 x 1	0	4	5	FIN TO 5/8
12	as	1	PL 14 1/2 x 1	2	10 1/8	42	
13	at	8	BAR 3 1/2 x 1/2	0	7 1/8	29	
14	au	1	PL 7 1/8 x 1/2	0	10 5/8	12	
15	ax	2	PL 7 1/8 x 1/2	1	9	43	
16	ba	1	PL 7 1/8 x 1/2	1	9	21	
17	bb	3	PL 7 1/8 x 1/2	1	0 5/8	30	
18	bc	1	PL 16 1/2 x 5/16	3	2 1/2	54	FIN TO 1/4
19	ca	2	PL 7 1/16 x 1/2	1	4 13/16	37	
20			1043				
21							
22							
23							
24							
25			4-SHIM PACK-2B				
26			(FOR MOTOR)				
27	bd	4	SHIM 4 1/2 x 1/8	0	4 3/4	3	
28	bf	8	SHIM 4 1/2 x 1/16	0	4 3/4	2	
29	bk	8	SHIM 4 1/2 x 1/32	0	4 3/4	2	
30			(7)				
31			5-SHIM PACK-2C				
32			(FOR BRAKE)				
33	bn	5	SHIM 2 1/2 x 1/8	0	2 1/2	2	
34	bs	10	SHIM 2 1/2 x 1/16	0	2 1/2	1	
35	bt	10	SHIM 2 1/2 x 1/32	0	2 1/2	1	
36			(4)				
37							
38							
39							
40							
41							
42							
43							
44							
45							
46							
47							
48							
49							
50							
51							
52							
53							
54							
55							
56							
57							
58							
59							
60							
61							
62							
63							
64							
65			PAINT B/M DIV. 87				
66							
67							
68							
69							
70							
71							
72							
73							
74							
75							

REV. #	DATE	NAME	DESCRIPTION

THIS DRAWING IS THE PROPERTY OF HEYL & PATTERSON, INC., AND FURNISHED IN CONFIDENCE FOR TEMPORARY USE AND TO BE RETURNED THEREAFTER IF REQUESTED. NOT TO BE COPIED OR DISCLOSED TO THOSE WITHOUT THE EXPRESS CONSENT OF HEYL & PATTERSON, INC.

5986-3-0210

HEYL & PATTERSON, INC.
CONTRACTING ENGINEERS
PITTSBURGH, U. S. A.

ROTARY RAILROAD CAR DUMPER
DETAIL OF DRIVE BASE

FOR BUREAU OF WATER & LIGHT
FIRST UNIT - DELTA STATION
LANSING, MICHIGAN

DIVISION
MADE W. DOLFI — DATE 4-10-70
CHECKED J. F. FUMAI — 7-1-70
APPROVED W. E. — 7-6-70
SCALE

A.M. SMITH CO., FORM 2

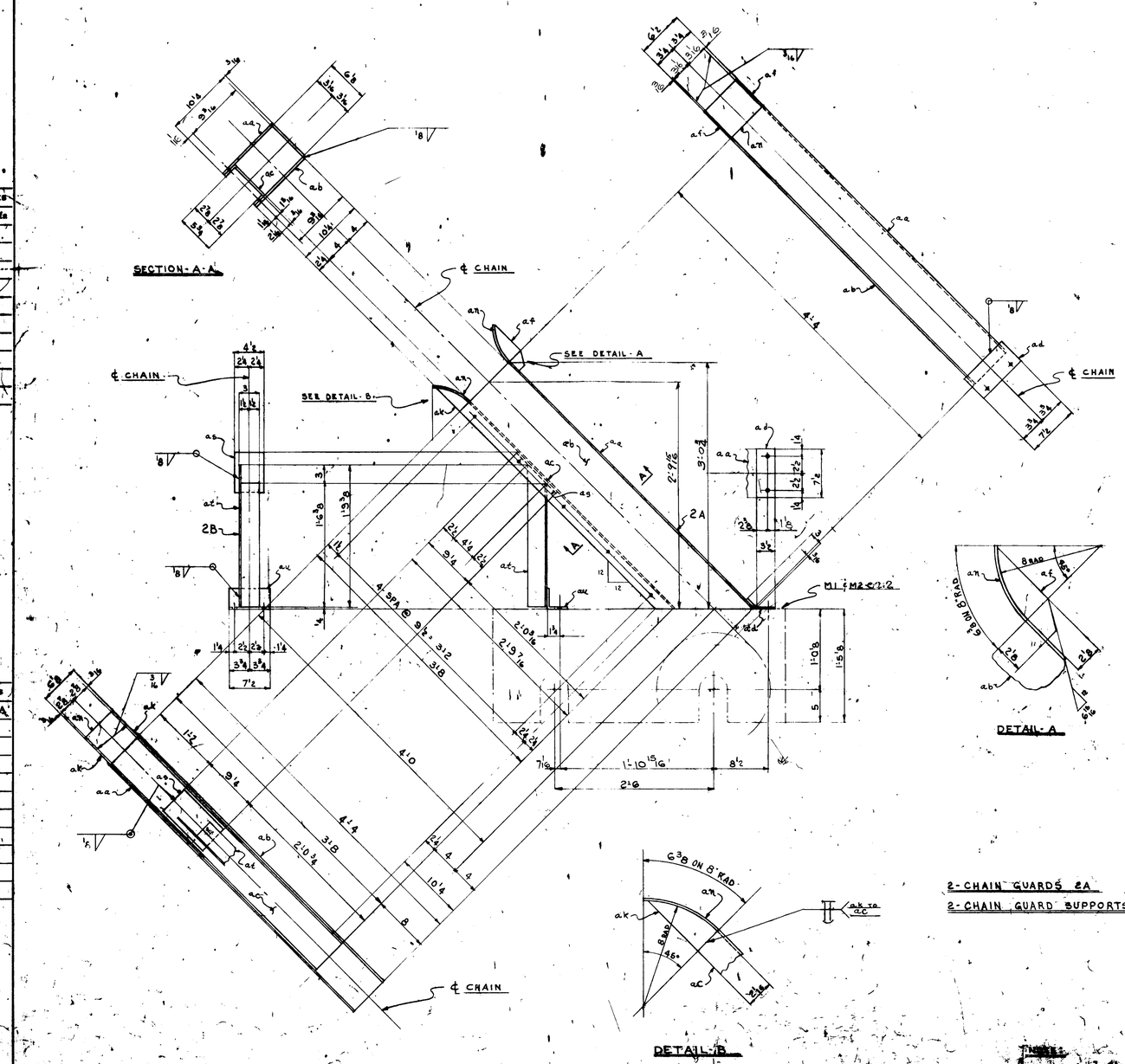

ASSEMBLY MARKS				
aa	ba	ca	da	fa
ab	bb	cb	db	
ac	bc	cc		
ad	bd			
ae				
af				
ag				
ah				
ai				
aj				
ak				

SHIPPING MARKS			
1A	3A.	4A.	5A
2B	3B	4B	
2C	3C		
2D			
2F			
2K			
2N			
2S			
2T			
2U			
2X			

BILL OF MATERIAL

LINE	MARK	NO. REQ.	SECTION	LENGTH	WEIGHT	REMARKS
1						
2			2-CHAIN GUARDS - 2A			
3	aa	2	PL 16 3/8 X 3/16	4 4	33	
4	ab	2	PL 10 1/4 X 3/16	4 4	58	
5	ac	2	PL 9 7/8 X 3/16	3 8	48	BENT
6	ad	2	PL 6 1/2 X 3/16	0 7 1/4	5	BENT
7	af	4	BAR 2 1/8 X 3/16	0 7 1/2	3	
8	ak	4	BAR 2 1/16 X 3/16	0 5 3/8	3	
9	an	4	BAR 5 3/4 X 3/16	0 6 3/8	7	BENT
10		20	3/8" ASR BOLTS	0 1 1/4		
11			217			
12						
13						
14			2-CHAIN GUARD SUPPORTS - 2B			
15	as	2	BAR 4 1/2 X 3/16	0 9 1/2	4	
16	at	2	L 3 X 3 X 1/4	1 6 3/8	15	
17	au	2	L 3 X 3 X 1/4	0 7 1/2	5	
18			24			
19						
20						
21						
22						
23						
24						
25						
26						
27						
28						
29						
30						
31						
32						
33						
34						
35						
36						
37						
38						
39						
40						
41						
42						
43						
44						
45						
46						
47						
48						
49						
50						
51						
52						
53						
54						
55						
56						
57						
58						
59						
60						
61						
62						
63						
64						
65			PAINT DIV 87			
66						
67						
68						
69						
70						
71						
72						
73						
74						
75						

TWT 241

REV. #	DATE	NAME	DESCRIPTION

THIS DRAWING IS THE PROPERTY OF HEYL & PATTERSON, INC. AND FURNISHED IN CONFIDENCE FOR TEMPORARY USE AND TO BE RETURNED THEREAFTER IF REQUESTED. NOT TO BE COPIED OR DISCLOSED TO OTHERS WITHOUT THE EXPRESS CONSENT OF HEYL & PATTERSON, INC.

5986-3-0211

HEYL & PATTERSON, INC.
CONTRACTING ENGINEERS
PITTSBURGH, U.S.A.

ROTARY RAILROAD CAR DUMPER
DETAILS OF DRIVE CHAIN GUARD

FOR BOARD OF WATER & LIGHT
FIRST U. DELTA STATION
LANSING, MICHIGAN

SCALE: 3/8" = 1'-0"
DRAWN: J.L. Lindner 9-10-75
CHECKED: W.F. 9-10-75
APPROVED:

A.M. SMITH CO., PITTS., PA.

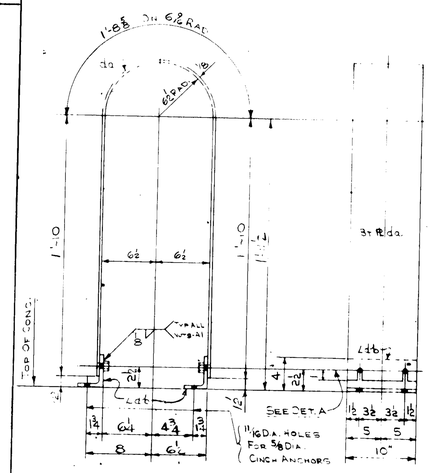

2 LINE SHAFT COUPLING GUARDS ~ M4

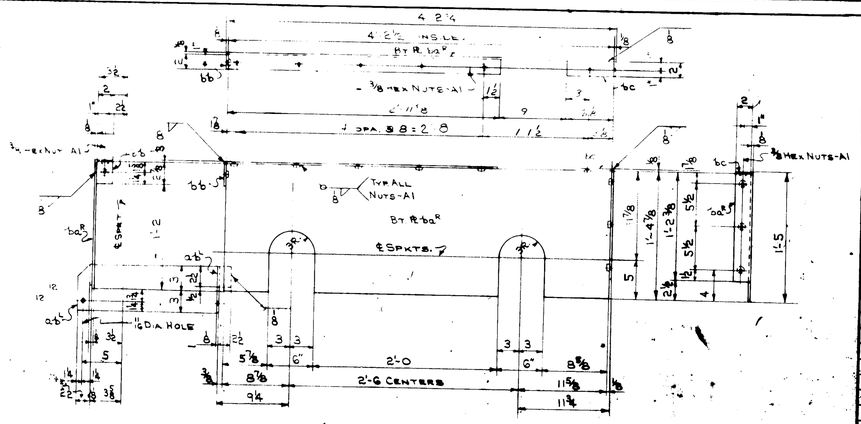

ONE ~ CHAIN GUARD ~ M2R (SHOWN)
ONE ~ CHAIN GUARD ~ M2L (OPP.)

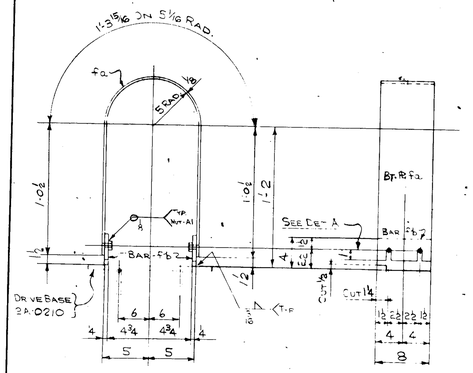

ONE ~ DRIVE BASE COUPLING GUARD ~ M5

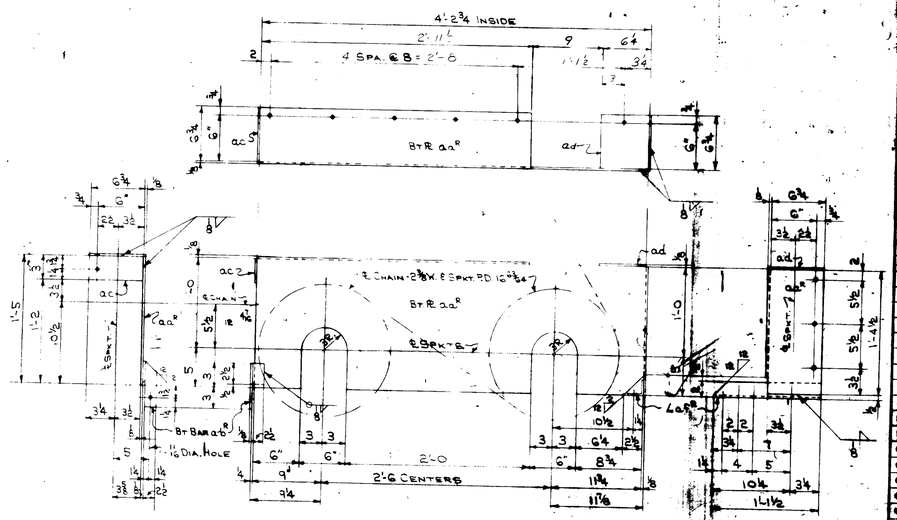

ONE ~ CHAIN GUARD ~ M1R (SHOWN)
ONE ~ CHAIN GUARD ~ M1L (OPP.)

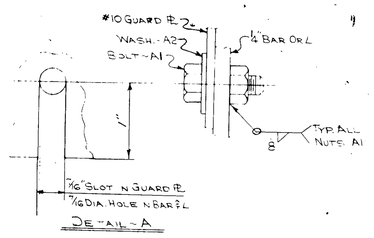

DETAIL ~ A

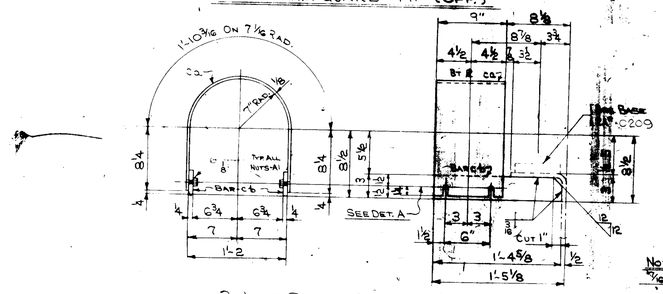

2-LINE SHAFT COUPLING GUARDS ~ M3

NOTE ~ 7/16 DIA. HOLES ~ UNLESS NOTED.

BILL OF MATERIAL

LINE	MARK	NO. PCS.	DESCRIPTION	WEIGHT	REFS. & REMS.
1					
2					
3			ONE ~ CHAIN GUARD ~ M1R (SHOWN)		
4			ONE ~ CHAIN GUARD ~ M1L (OPP)		
5			ASSEMBLE IN FIELD AS PER DWG. 2-1		
6	aa	2	BT. R. 23¾ × #10GA. × 4'-9½	94	
7	ab	2	BT. BAR 5 × #10GA. × 0'-6	4	
8	ac	2	BAR 3 × #10GA. × 0'-6¾	3	
9	ad	2	BAR 6 × #10GA. × 0'-6¾	3	
10	ae	2	L 2×2×¼ × 1'-1½	6	
11			(110)		
12					
13					
14					
15			ONE ~ CHAIN GUARD ~ M2R (SHOWN)		
16			ONE ~ CHAIN GUARD ~ M2L (OPP.)		
17			ASSEMBLE IN FIELD AS PER DWG. 0201		
18	[illegible]	[illegible]	BT. R. 18 × #10GA. × 4'-1½	68	
19	[illegible]	[illegible]	BAR 2 × #10GA. × 0'-6⅝	[illegible]	
20	[illegible]	[illegible]	BAR 2 × #10GA. × 0'-6⅝	[illegible]	
21	[illegible]	[illegible]	BAR [illegible] × #10GA. × 0'-6	[illegible]	
22	[illegible]	[illegible]	[illegible]	[illegible]	
23					
24					
25					
26			2-LINE SHAFT COUPLING GUARDS ~ M3		
27			ASSEMBLE IN FIELD AS PER DWG. 0201		
28	fa	2	BT. R. 10 × #10GA. × 5'-4	68	
29	fb	4	BAR 3 × ¼ × 1'-4⅝	20	
30	A1	8	⅝ DIA. × 1 1/16 A.S.R. BOLTS (WELD NUTS)		
31	A2	8	⅝" STD. FLAT WASHERS		
32			(88)		
33					
34					
35					
36					
37			ONE ~ DRIVE BASE COUPLING GUARD ~ M5		
38			ASSEMBLE IN FIELD AS PER DWG. 0201		
39	fa	1	BT. R. 8 × #10GA. × 3'-4 15/16		
40	fb	2	BAR 4 × 4 × 0'-8		
41	A1	4	⅝ DIA. × 1 1/16 A.S.R. BOLTS (WELD NUTS)		
42	A2	4	⅝" STD. FLAT WASHERS		
43			(28)		
44					
45					
46					
47					
48					
49					
50					
51					
52					
53					
54					
55					
56					
57					
58					
59					
60					
61					
62					
63					
64					
65					
66					
67					
68					
69					
70					
71					
72					
73			SHOP PAINT ~ SEE B/M DWG. 87		
74					
75					
			323		

REV. #	DATE	NAME	DESCRIPTION

THIS DRAWING IS THE PROPERTY OF HEYL & PATTERSON, INC., AND FURNISHED IN CONFIDENCE FOR TEMPORARY USE AND TO BE RETURNED THEREAFTER IF REQUESTED. NOT TO BE COPIED OR DISCLOSED TO OTHERS WITHOUT THE EXPRESS CONSENT OF HEYL & PATTERSON, INC.

5986-3-0212

HEYL & PATTERSON, INC.
CONTRACTING ENGINEERS
PITTSBURGH, U. S. A.

ROTARY RAILROAD CAR DUMPER
DETAILS OF CHAIN & COUPLING GUARDS

FOR [illegible] SHT. [illegible] OF [illegible]
PROJECT [illegible]
LANG [illegible] STATION [illegible]

DIVISION
MADE
CHECKED
APPROVED

SCALE
DATE 4-27-71

R. & R. SMITH CO., YORK, PA.

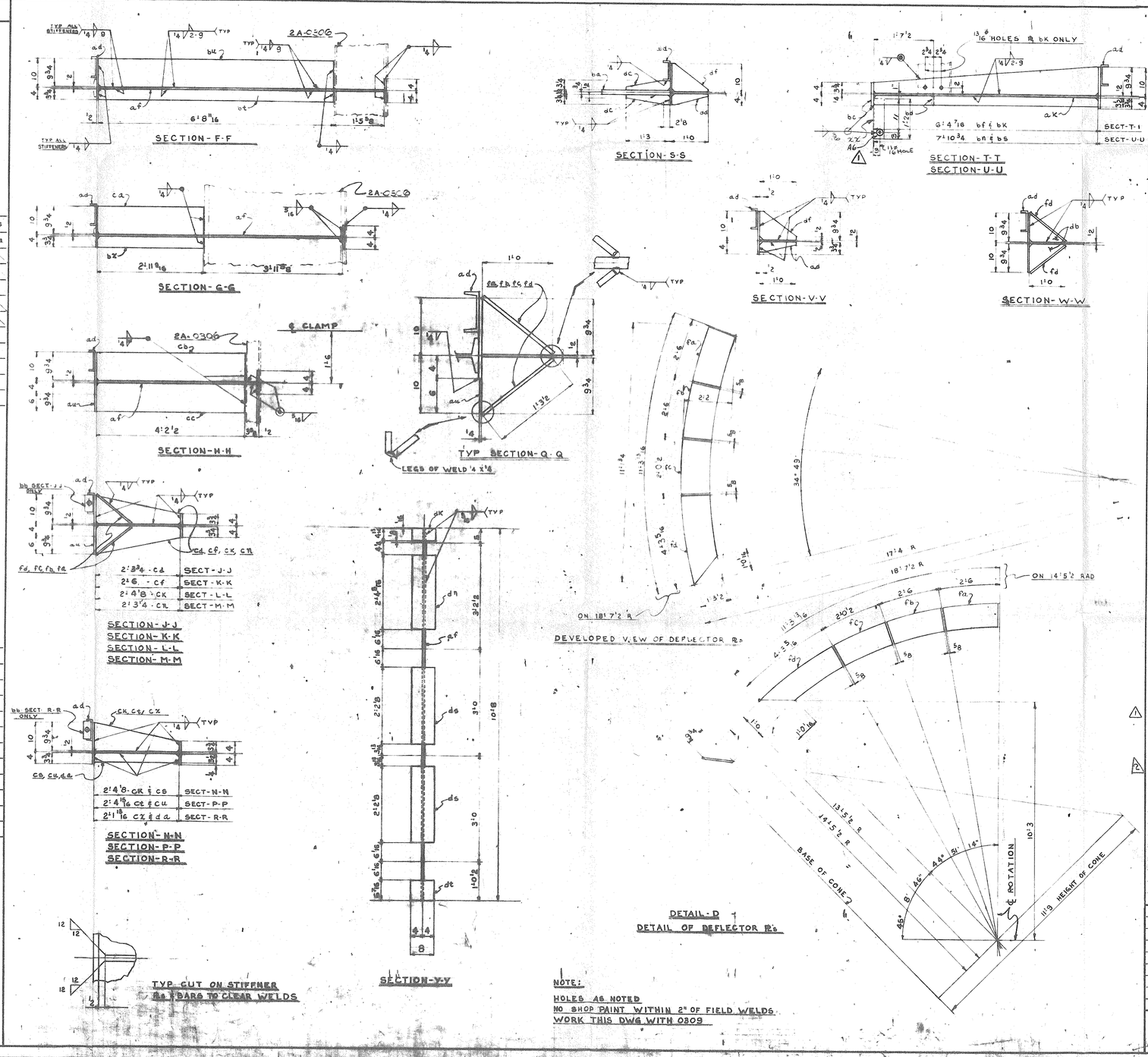

ASSEMBLY MARKS			
ba	ba	ca	da	fa
ab	bb	cb	db	
ac	bc	cc		
ad	bd			
af				
ak				
an				
as				
at				
au				
ax				

SHIPPING MARKS			
2A	3A	4A	5A
2B	3B	4B	
2C	3C		
2D			
2F			
2K			
2N			
2S			
2T			
2U			
2X			

BILL OF MATERIAL

LINE	MARK	NO. PCS.	SECTION	LENGTH	WEIGHT	REMARKS	ITEM
1							
2			ONE-END RING SECTION-2A - SHOWN & NOTED				
3			ONE-END RING SECTION-2B - OPP				
4							
5	aa	2	175# CRANE RAILS	31 8 9/16	3700	BENT	5
6	ab 5/8	2	Rs 14 x 1'2	23 0 15/16	1110	BENT- ADDED 4" FOR BENDING	27
7	ac 5/8	2	Rs 14 x 1'2	23 0 15/16	1110	BENT - ADDED 4" FOR BENDING	27
8	ad	4	Cs 7@ 9.8	23 10'2	974	BENT LGTH ON 14'5'2 RAD REQ. 1'0 FOR BENDING	5
9	af	2	Rs 105 5/16 x 1'2	12 9 3/16	4810		24
10	ak	1	PL 100'2 x 1'2	12 7	2224	FOR 2A	26
11	an	1	PL 100'2 x 1'2	12 7	2224	FOR 2B	26
12	as	2	PL 46 x 1'2	13 10 1/16	2176		29-5
13	at	2	PL 8 x 3/4	12 1	480	BENT	5
14	au	2	BARS 6 x 1/4	11 3 13/16	120	BENT	5
15	ax	16	Ls 3'2 x 3'2 x 3/8	0 3	34		5
16	ba	2	PL 24 x 1'2	2 0	245		5
17	bb	4	PL 6'2 x 3'2	0 8	204		29-5
18	bc	2	PL 8 x 1'2	10 8 3/8	291		5
19	bd	2	BARS 3'2 x 1'2	3 7 3/8	43		5
20	bf	2	BARS 3'2 x 1'2	6 4 7/16	76		5
21	bk	2	PL 9 3/4 x 1'2	6 4 7/16	211		29-5
22	bn	2	BARS 3'2 x 1'2	7 10 3/4	94		5
23	bs	2	PL 9 3/4 x 1'2	7 10 3/4	261		29-5
24	bt	2	BARS 3 3/4 x 1'2	6 8 11/16	86		5
25	bu	2	PL 9 3/4 x 1'2	6 8 11/16	222		29-5
26	bx	2	BARS 3 3/4 x 1'2	2 11 9/16	38		5
27	ca	2	PL 9 3/4 x 1'2	2 11 9/16	98		29-5
28	cb	2	PL 9 3/4 x 1'2	4 2'2	140		29-5
29	cc	2	PL 9 3/4 x 1'2	4 2'2	140		29-5
30	cd	4	PL 9 3/4 x 1'2	2 3 3/4	152		29-5
31	cf	4	PL 9 3/4 x 1'2	2 6	164		29-5
32	ck	6	PL 9 3/4 x 1'2	2 4 1/8	234		29-5
33	cn	4	PL 9 3/4 x 1'2	2 3 1/4	150		29-5
34	cs	2	BAR 3'2 x 1'2	2 4 1/8	27		5
35	ct	2	PL 9 3/4 x 1'2	2 4 15/16	79		29-5
36	cu	2	BAR 3'2 x 1'2	2 4 15/16	29		5
37	cx	2	PL 9 3/4 x 1'2	2 1 13/16	70		29-5
38	da	2	BAR 3'2 x 1'2	2 1 13/16	26		5
39	db	4	PL 9 3/4 x 1'2	1 0	66		29-5
40	dc	4	BAR 3 1/4 x 1'2	1 3	28		5
41	dd	16	BAR 3 3/4 x 1'2	1 0	92		5
42	df	16	PL 9 3/4 x 1'2	1 0	264		29-5
43	dk	2	BAR 4 13/16 x 1'2	0 8	12		29-5
44	dn	2	PL 8 x 1'2	2 4 5/8	50		5
45	ds	4	PL 8 x 1'2	2 2 5/8	118		29-5
46	dt	2	PL 6 7/16 x 1'2	0 8	14		29-5
47	du	4	BAR 3 3/4 x 3/4	0 6	19		5
48	dx	4	BAR 3 3/4 x 3/4	1 3 5/16	48		5
49	fa	4				BENT	5
50	fb	4			984	CUT FROM 4 Rs	5
51	fc	4				26 x 1'4 x 11 13/16	5
52	fd	4					5
53	ff	2	Ls 3 x 3 x 1'4	10 6	106	SHIPPING L	5
54	fk	2	ST 7 WF @ 30.5	11 8 3/16	712	SHIPPING TEE	5
55	A1	132	7/8" ϕ HI TEN BOLTS	0 3			
56	A2	132	7/8" ϕ QT 1 5/8" BEV WASH.				
57	A3	132	7/8" ϕ QT CLIPPED WASH				
58	xx	2	Ls 4 x 4 x 5/16	1 3	34		
59	A6	2	2 1/2" ϕ HALF COUPLING			ASSY IN SHOP & WELD	
60							
61							
62			NOTE:				
63			FINISHED ASSEMBLY MUST BE CONCENTRIC				
64			WITHIN ±1/8" ON THE DIAMETER OF THE END RING				
65							
66							
67							
68							
69							
70			PAINT B/M DIV 87				
71							
72							
73							
74				T/WT	3700	RAILS	
75				T/WT	20757	STRUCT. STL.	

NOTE:
HOLES AS NOTED
NO SHOP PAINT WITHIN 2" OF FIELD WELDS.
WORK THIS DWG WITH 0309

REV. #	DATE	NAME	DESCRIPTION
2	1-28-71	T.W.	NOTE ADDED
1	1-15-71	S.K.K.	ADDED A6 LINE 59

THIS DRAWING IS THE PROPERTY OF HEYL & PATTERSON, INC. AND FURNISHED IN CONFIDENCE FOR TEMPORARY USE AND TO BE RETURNED THEREAFTER IF REQUESTED. NOT TO BE COPIED OR DISCLOSED TO OTHERS WITHOUT THE EXPRESS CONSENT OF HEYL & PATTERSON, INC.

5986-3-0302

HEYL & PATTERSON, INC.
CONTRACTING ENGINEERS
PITTSBURGH, U. S. A.

ROTARY RAILROAD CAR DUMPER
DETAILS OF END RING
-TOP SECTION-
FOR FIRST UNIT - DELTA STATION
BOARD OF WATER AND LIGHT
LANSING, MICH.

DIVISION 87
MADE G.D.C. 1-8-71
CHECKED T.W. 1-15-71
APPROVED H.T.
SCALE
DATE 12-7-70

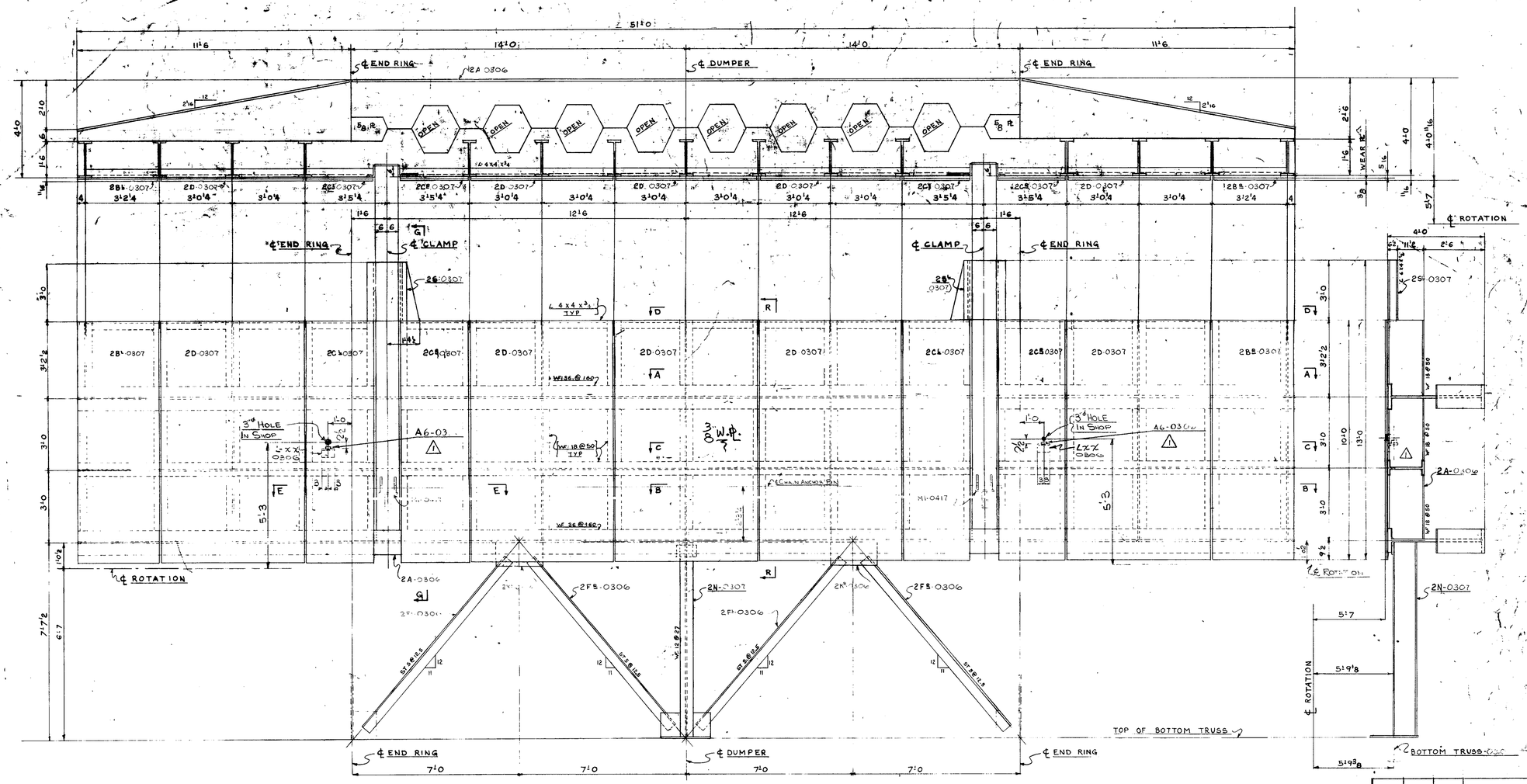

GENERAL ARRANGEMENT & DETAILS OF SHELL TRUSS

4843 168-46

J.A.B. 10-29-71

REV. #	DATE	NAME	DESCRIPTION
1	1-15-71	S.K.K.	WAS ADDED A6-0306

SCALE 1/2 INCHES TO ONE FOOT

5986-3-0305

HEYL & PATTERSON, INC.
CONTRACTING ENGINEERS
PITTSBURGH, U. S. A.

ROTARY RAILROAD CAR DUMPER
GEN ARRAY & DETAILS OF SHELL TRUSS

FOR PROJECT 0.07 W. 7.84 AND LIGHT
FIRST WITLEY STATION
PITTSBURGH, PENNSYLVANIA

CONTRACT DIV. 7.03 PROJ. 5.2.8.2
MADE J.A.B. 10-29-70 APPROVED
TRACED CHECKED
APPROVED

NOTE:
WORK THIS DWG WITH

THIS DRAWING IS THE PROPERTY OF HEYL & PATTERSON, INC., AND FURNISHED IN CONFIDENCE FOR TEMPORARY USE AND TO BE RETURNED THEREAFTER IF REQUESTED. NOT TO BE COPIED OR DISCLOSED TO OTHERS WITHOUT THE EXPRESS CONSENT OF HEYL & PATTERSON, INC.

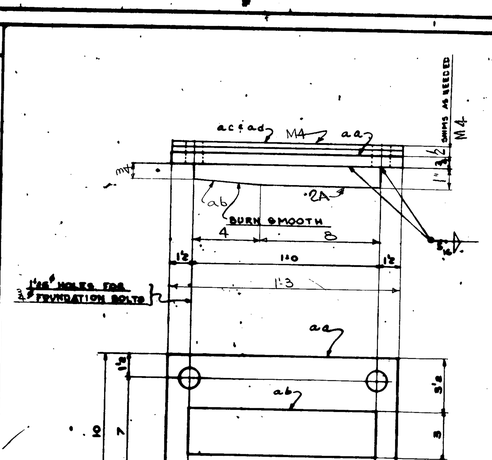

2 - PLATEN THRUST WEDGE - 2A

2 - SHIM PACKS - M4

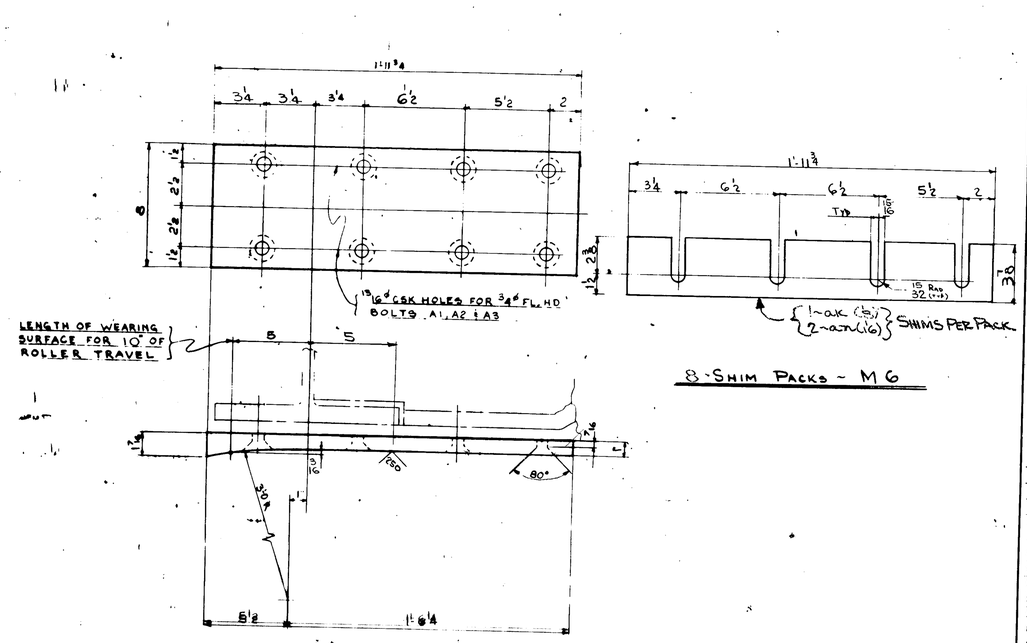

4 - PLATEN ROLLER WEDGES - M3

8 - SHIM PACKS - M6

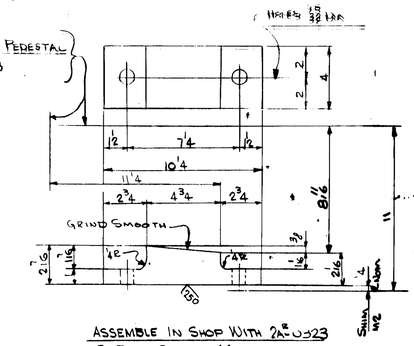

ASSEMBLE IN SHOP WITH 2AE 0323

2 - END STOPS ~ M1

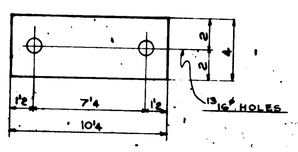

ASSEMBLE IN SHOP WITH 2AE 0323

2 - SHIM PACKS - M2

NOTE:
HOLES AS NOTED.

4848 15-8-53

J.A.B. 12-29-71

BILL OF MATERIAL

LINE	MARK	NO. REQ'D	SECTION	LENGTH		WEIGHT	REMARKS	ITEM NO
1								
2			2-PLATEN THRUST WEDGES - 2A					
3	aa	2	R 10 X 3/4	1	3	60		
4	ab	2	BARS 5 X 1"	1	0	26	WIRE TO SHIP	
5			(91)					
6								
7								
8			2 END STOPS M1					
9		2	BARS 4 X 3	0	10 1/4	40	ASSEMBLE IN SHOP	
10			Rough Wt 70#				AS PER DWG 0105 WITH 2AE-0323	
11								
12			4 PLATEN ROLLER WEDGES - M3					
13		4	R 8 X 1 1/2 (3 1/2 x 20")	1	11 3/4	125	C-1045	
14	A1	32	3/4" CSK FL HD BOLTS	0	3 1/2		ASSEMBLE IN SHOP	
15	A2 & A3	32	3/4" LOCK WASHERS				AS PER DWG 0105 & 0104	
16			3/4" HEX NUTS				WITH PATTERN 2A-0312	
17								
18								
19								
20			2 SHIM PACKS	M	2		ASSEMBLE IN SHOP	
21		12	BARS 4 X 1/16	0	10 1/4	9	AS PER DWG 0105 WITH 2AE-0323	
22								
23								
24			2 SHIM PACKS	M	4			
25	ac	4	R 10 X 1/4	1	3	40		
26	ad	8	R 10 X 1/16	1	3	20		
27			(60)					
28								
29								
30								
31								
32								
33								
34								
35								
36								
37								
38								
39								
40								
41								
42								
43								
44			8 - SHIM PACKS - M6					
45								
46	ak	5	BARS 3 1/2 x 1/4	1	11 3/4	27		
47	an	16	BARS 3 1/2 x 1/16	1	11 3/4	27		
48			(54)					
49								
50								
51								
52								
53								
54								
55								
56								
57								
58								
59								
60								
61								
62								
63								
64								
65								
66								
67								
68								
69								
70								
71								
72								
73								
74								
75						Wt. 415		

ASSEMBLY MARKS

aa	ba	ca	da	fa
ab	bb	cb	db	
ac	bc	cc		
ad	bd			
ae				
af				
ag				
ah				
ai				
aj				
ak				

SHIPPING MARKS

2A	3A	4A	5A
2B	3B	4B	
2C	3C		
2D			
2E			
2F			
2G			
2H			
2J			
2K			
2L			
2M			

REV. #	DATE	NAME	DESCRIPTION

THIS DRAWING IS THE PROPERTY OF HEYL & PATTERSON, INC. AND FURNISHED IN CONFIDENCE FOR TEMPORARY USE AND TO BE RETURNED THEREAFTER IF REQUESTED. NOT TO BE COPIED OR DISCLOSED TO OTHERS WITHOUT THE EXPRESS CONSENT OF HEYL & PATTERSON, INC.

5986-3-0314

HEYL & PATTERSON
CONTRACTING ENGINEERS
PITTSBURGH, U.S.A.

ROTARY RAILROAD CAR DUMPER
DETAIL OF PLATEN THRUST WEDGE

BOARD OF WATER & FLIGHT
FIRST UNIT - DELTA STATION
LEVEE, MISSISSIPPI

DRAWN: 2-13-70
CHECKED: 4-6-70
APPROVED: 4-13-70